NW
Wiper NW

HANSA-FLEX

Properties

Design	Wipers
Sliding speed max.	4,0 m/s
Temp. min.	-30 °C
Temp. max.	110 °C
Media	Mineral oils
Installation	press wiper into the locating groove
Material	Wiper: PA + MoS2
Application	Hydraulics

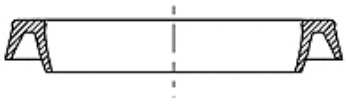

Toleranz / Tolerance			
d	D	L	C
h11	+0,20 0	+0,25 0	+0,10 0

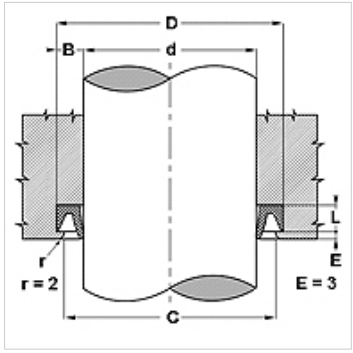

Description

Easy assembly.
Simple solution.
High abrasion resistance.

Item

Identification	d (mm)	D (mm)	L (mm)	C (mm)
NW 500	12,70	22,22	4,4	20,62
NW 16	16,00	26,00	4,5	24,50
NW 750	19,05	31,75	6,0	30,15
NW 20	20,00	33,00	6,0	31,50
NW 875	22,22	34,92	6,0	33,32
NW 25	25,00	38,00	6,0	36,50
NW 1000	25,40	38,10	6,0	36,50
NW 1125	28,57	41,27	6,0	99,70
NW 1250	31,80	44,45	6,0	72,29
NW 1500	38,10	50,80	6,0	49,20
NW 1750	44,45	57,15	6,0	52,37
NW 50	50,00	63,00	6,0	61,50
NW 2000	50,80	63,50	6,0	61,90
NW 2500	63,50	76,20	6,0	74,60
NW 2750	69,85	82,55	6,0	80,65
NW 70	70,00	83,00	6,0	81,50
NW 3000	76,20	88,90	6,0	87,30

Despite careful checking, we cannot guarantee the accuracy of all information included on this site, and we accept no liability.