OR 90° Shore FPM

O-ring, 90SH FKM (FPM)

HANSA-FLEX

Properties

Design	O-ring
Temp. min.	-15 °C
Temp. max.	200 °C
Material	FPM 90 Shore



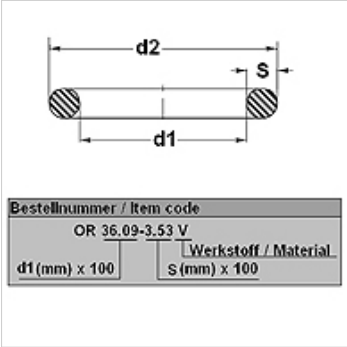

Item

Identification	d1 (mm)	d2 (mm)	s (mm)
OR 15.6-1.78 V90	15,60	19,16	1,78
OR 50.39-3.53 V90	50,39	57,45	3,53
OR 91.44-5.34 V90	91,44	102,12	5,34
OR 91.67-3.53 V90	91,67	98,73	3,53
OR 117.07-3.53 V90	117,07	124,13	3,53
OR 266.29-3.53 V90	266,29	273,35	3,53

Despite careful checking, we cannot guarantee the accuracy of all information included on this site, and we accept no liability.