OR 80° Shore NBR

O-ring 80SH NBR

HANSA-FLEX

Properties

Design	O-ring
Temp. min.	-30 °C
Temp. max.	110 °C
Material	NBR 80 Shore



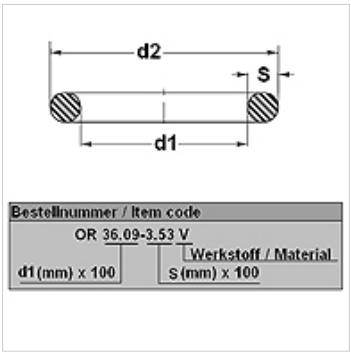

Item

Identification	d1 (mm)	d2 (mm)	s (mm)
OR 5-1.5 N80	5,00	8,00	1,50
OR 8-1.9 N80	8,00	11,80	1,90
OR 8.73-1.78 N80	8,73	12,29	1,78
OR 12-2 N80	12,00	16,00	2,00
OR 12.42-1.78 N80	12,42	15,98	1,78
OR 13.94-2.62 N80	13,94	19,18	2,62
OR 14-2.5 N80	14,00	19,00	2,50
OR 16-3 N80	16,00	22,00	3,00
OR 18.3-3.6 N80	18,30	25,50	3,60
OR 19.8-3.6 N80	19,80	27,00	3,60
OR 21.3-3.6 N80	21,30	28,50	3,60
OR 21.89-2.62 N80	21,89	27,13	2,62
OR 23-2 N80	23,00	27,00	2,00
OR 23-3.6 N80	23,00	30,20	3,60
OR 24.6-3.6 N80	24,60	31,80	3,60
OR 25.12-1.78 N80	25,12	28,68	1,78
OR 26.2-3.6 N80	26,20	33,40	3,60
OR 27.8-3.6 N80	27,80	35,00	3,60
OR 28.17-3.53 N80	28,17	35,23	3,53
OR 29-3 N80	29,00	35,00	3,00
OR 29-3.5 N80	29,00	36,00	3,50
OR 29.3-3.6 N80	29,30	36,50	3,60
OR 31.42-2.62 N80	31,42	36,66	2,62
OR 32-3.5 N80	32,00	39,00	3,50
OR 32.5-3.6 N80	32,50	39,70	3,60
OR 34.1-3.6 N80	34,10	41,30	3,60
OR 34.59-2.62 N80	34,59	39,83	2,62
OR 35.6-3.6 N80	35,60	42,80	3,60
OR 37.3-3.6 N80	37,30	44,50	3,60
OR 39.5-2.5 N80	39,50	44,50	2,50
OR 40-3 N80	40,00	46,00	3,00
OR 40.64-5.34 N80	40,64	51,32	5,34
OR 42.86-3.53 N80	42,86	49,92	3,53
OR 46-3 N80	46,00	52,00	3,00
OR 49.2-3.53 N80	49,20	56,26	3,53
OR 50-3 N80	50,00	56,00	3,00
OR 50.17-5.34 N80	50,17	60,85	5,34
OR 53.57-3.53 N80	53,57	60,63	3,53
OR 55-3 N80	55,00	61,00	3,00
OR 55.25-2.62 N80	55,25	60,49	2,62
OR 58.74-3.53 N80	58,74	65,80	3,53
OR 60-3 N80	60,00	66,00	3,00
OR 65.1-3.53 N80	65,10	72,16	3,53
OR 67-3 N80	67,00	73,00	3,00
OR 68-6 N80	68,00	80,00	6,00
OR 69.44-3.53 N80	69,44	76,50	3,53
OR 72.62-3.53 N80	72,62	79,68	3,53
OR 75.79-3.53 N80	75,79	82,85	3,53
OR 81.92-5.34 N80	81,92	92,60	5,34
OR 88-6 N80	88,00	100,00	6,00

Despite careful checking, we cannot guarantee the accuracy of all information included on this site, and we accept no liability.

OR 80° Shore NBR

O-ring 80SH NBR

HANSA-FLEX

Item

Identification	d1 (mm)	d2 (mm)	s (mm)
OR 89.69-5.34 N80	89,69	100,37	5,34
OR 97.79-5.34 N80	97,79	108,47	5,34
OR 107.54-3.53 N80	107,54	114,60	3,53
OR 113.89-3.53 N80	113,89	120,95	3,53
OR 116.84-5.34 N80	116,84	127,52	5,34
OR 117.07-3.53 N80	117,07	124,13	3,53
OR 126.37-5.34 N80	126,37	137,05	5,34
OR 126.37-7 N80	126,37	140,37	7,00
OR 132.72-7 N80	132,72	146,72	7,00
OR 133.35-5.34 N80	133,35	144,03	5,34
OR 139.07-7 N80	139,07	153,07	7,00
OR 139.29-3.53 N80	139,29	146,35	3,53
OR 142.24-5.34 N80	142,24	152,92	5,34
OR 142.24-7 N80	142,24	156,24	7,00
OR 145.42-5.34 N80	145,42	156,10	5,34
OR 148.82-3.53 N80	148,82	155,88	3,53
OR 151.77-5.34 N80	151,77	162,45	5,34
OR 151.77-7 N80	151,77	165,77	7,00
OR 158.12-7 N80	158,12	172,12	7,00
OR 164.47-5.34 N80	164,47	175,15	5,34
OR 170.82-5.34 N80	170,82	181,50	5,34
OR 177.17-7 N80	177,17	191,17	7,00
OR 183.52-5.34 N80	183,52	194,20	5,34
OR 189.87-5.34 N80	189,87	200,55	5,34
OR 190.09-3.53 N80	190,09	197,15	3,53
OR 202.57-7 N80	202,57	216,57	7,00
OR 240.67-7 N80	240,67	254,67	7,00
OR 291.47-7 N80	291,47	305,47	7,00

Despite careful checking, we cannot guarantee the accuracy of all information included on this site, and we accept no liability.