PW U
Wiper PW-U

Properties

Sliding speed max.	0,5 m/s
Temp. min.	-30 °C
Temp. max.	80 °C
Media	Mineral oils
Installation	is pressed into an open groove
Material	(1) Sleeve: Steel (2) Wiper: PUR
Application	Hydraulics

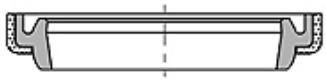

Toleranz / Tolerance		
d	D	L
h11	H8	+0,20 0

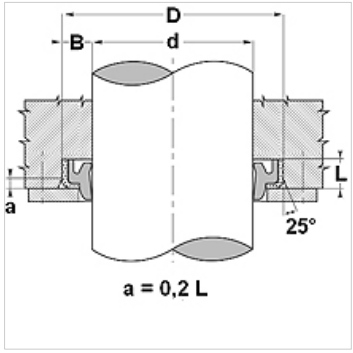

Description

Low spatial requirement.
High abrasion resistance.
Simple solution.

Item

Identification	d (mm)	D (mm)	L (mm)
PW 20-U	20	32	6,0
PW 22-U	22	34	6,0
PW 25-U	25	37	6,0
PW 30-U	30	42	6,0
PW 35-U	35	47	7,0
PW 40-U	40	52	7,0
PW 45-U	45	57	7,0
PW 50-U	50	62	7,0
PW 55-U	55	69	8,0
PW 60-U	60	74	8,0
PW 65-U	65	79	8,0
PW 70-U	70	84	8,0
PW 75-U	75	89	8,0
PW 80-U	80	94	8,0
PW 85-U	85	99	8,0
PW 90-U	90	104	8,0
PW 95-U	95	109	8,0
PW 100-U	100	114	8,0
PW 105-U	105	121	9,0
PW 110-U	110	126	9,0
PW 120-U	120	136	9,0

Despite careful checking, we cannot guarantee the accuracy of all information included on this site, and we accept no liability.