RSE W
Piston seal RSE-W

Properties

Design	Piston U-ring
Operating pressure	up to 400 bar
Sliding speed max.	0,5 m/s
Temp. min.	-30 °C
Temp. max.	80 °C
Media	Mineral oils
Installation	on one-piece pistons
Material	(1) Guide ring: acetal resin (2) Seal: PUR
Application	Hydraulics

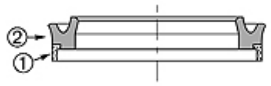

Toleranz / Tolerance						
D	d	L	G	F	R	Q
H10/ e8	+0,1 0	+0,2 0	±0,1	+0,20 +0,10	0 -0,05	±0,10

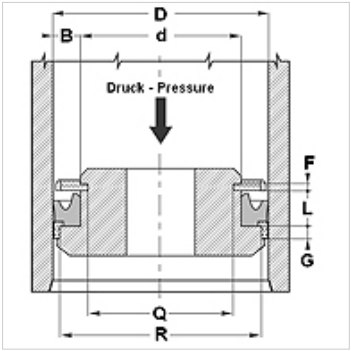

Description

High abrasion resistance.
Good tightness.
Simple solution.

Ordering information

We are able to produce seals with diameters of 20 to 510 mm with short lead times.

Item

Identification	D (mm)	d (mm)	L (mm)	G (mm)	R (mm)
RSE 32 20-W	32	20	9,0	6,35	28,50
RSE 40 25-W	40	25	9,5	6,35	35,40
RSE 45 35-W	45	35	9,5	6,35	40,40
RSE 60 40-W	60	40	14,5	6,35	55,40
RSE 65 50-W	65	50	11,0	6,35	60,40
RSE 70 50-W	70	50	14,5	6,35	64,20
RSE 80 60-W1	80	60	14,5	6,35	74,15
RSE 90 70-W1	90	70	14,5	6,35	84,15
RSE 100 80-W	100	80	14,5	6,35	93,15

Despite careful checking, we cannot guarantee the accuracy of all information included on this site, and we accept no liability.