RSE W-AR

Piston seal RSE-W-AR

Properties

Design	Piston U-ring
Operating pressure	up to 400 bar
Sliding speed max.	0,5 m/s
Temp. min.	-30 °C
Temp. max.	80 °C
Media	Mineral oils
Installation	on one-piece pistons
Material	(1) Guide ring: acetal resin (2) Seal: PUR (3) Seeger ring: acetal resin
Application	Hydraulics

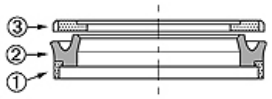

Toleranz / Tolerance						
D	d	L	G	F	R	Q
H10/ e8	+0,1 0	+0,2 0	±0,1	+0,20 +0,10	0 -0,05	±0,10

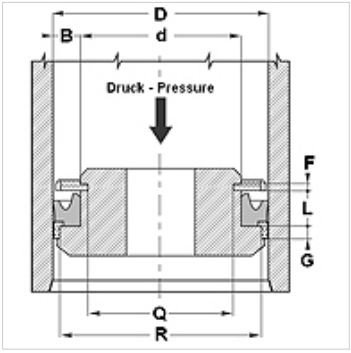

Description

High abrasion resistance.
Good tightness.
Simple solution.

Ordering information

We are able to produce seals with diameters of 20 to 510 mm with short lead times.

Item

Identification	D (mm)	d (mm)	L (mm)	G (mm)	F (mm)	R (mm)	Q (mm)
RSE 40 26-W-AR	40	26	9,4	6,35	3,1	35,40	21,60
RSE 63 45-W-AR	63	45	10,5	6,35	3,1	58,40	40,84

Despite careful checking, we cannot guarantee the accuracy of all information included on this site, and we accept no liability.