HK BA 4/5 NG16

Single connection plate NG16

Properties

Scope of supply	incl. screw set (4x M10 x 50 and 2x M6 x 30)
Material	Material: Steel (350 bar)
Connection	ISO/Cetop 07 NG16



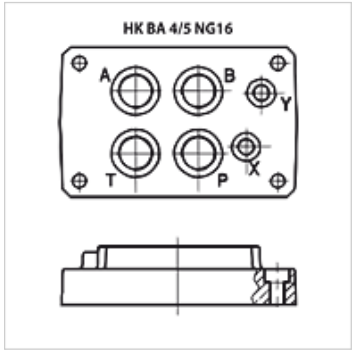

Note

Further sub-bases available on request

Item

Identification	Stations	Connections A + B	Connections P + T	Height (mm)	Width (mm)	Length (mm)	Weight (kg)
HK BA 418	Single connection	G 3/4"-bottom	G 3/4"-bottom	45	115	179	3,5
HK BA 518	Single connection	G 1"-bottom	G 1"-bottom	65	120	179	8,0

Despite careful checking, we cannot guarantee the accuracy of all information included on this site, and we accept no liability.