HK EPMM F

Flange for gerotor motor

Properties

Use	For gerotor motor type EPMM



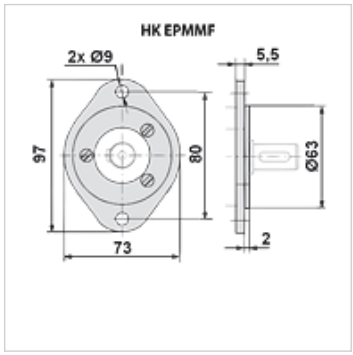

Note

Fastening to motor using 3 M6x14 screws
5 - 6 Nm tightening torque

Item

Identification	Weight (kg)
HK EPMM F	0,5

Accessory for following products

HK EPMM C	EPMM gerotor motor

Despite careful checking, we cannot guarantee the accuracy of all information included on this site, and we accept no liability.