HK KR 01
Check valve

Properties

Design	Sandwich body valve
Operating pressure	max. 350 bar
Volumetric flow	max. 100 l/min
Connection	ISO/Cetop 05 size 10

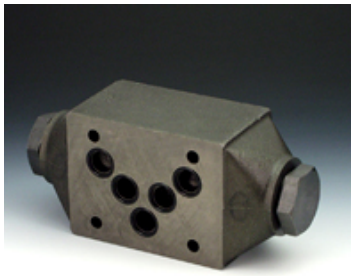

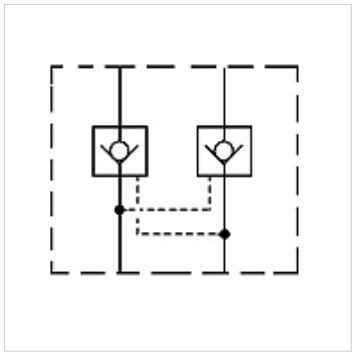

Description
Sandwich body valve for constructing sandwich arrangements with ISO/Cetop 05 size 10 valves

Ordering information
Further sandwich body valves available on request

Item

Identification	acts in channel	Design	Plate height (mm)	Weight (kg)
HK KR 011	P	direct-controlled	50	2,8
HK KR 012	A + B	pilot controlled, opening ratio 1: 3.3	50	2,8
HK KR 013	A	pilot controlled, opening ratio 1: 3.3	50	2,8
HK KR 014	B	pilot controlled, opening ratio 1: 3.3	50	2,8

Despite careful checking, we cannot guarantee the accuracy of all information included on this site, and we accept no liability.