HK PAM 014 R

Manual pump for pipeline installation

Properties

Material	Housing: cast iron, inner parts steel



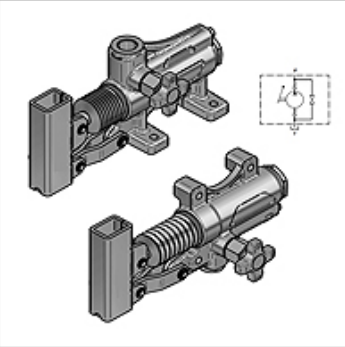

Note

The pressure relief valves must be set according to the application.

Ordering information

Caution! Remember to order the hand lever HKPAM0290000!

Item

Identification	Thread	Vdh (ccm) (cc)	Design	p max. (bar)	Pressure (30)* (bar)	Weight (kg)
HK PAM 014 20 00	1/2-3/8" IG	20	with manual drain	350	130	2,75
HK PAM 014 20 02	1/2-3/8" IG	20	without manual drain and pressure relief valve	350	130	2,70
HK PAM 014 20 04	1/2-3/8" IG	20	with pressure relief valve	350	130	2,90
HK PAM 014 40 00	1/2-1/2" IG	40	with manual drain	280	90	3,65
HK PAM 014 40 04	1/2-1/2" IG	40	with pressure relief valve	280	90	3,80

Vdh = conveying volume per double stroke – Pressure (30)= pressure with hand force 30 daN with standard lever

Accessories

HK PAM Hebel	Lever for PAM manual pump
HK PAM Faltenbalg	Bellows for PAM manual pump

Despite careful checking, we cannot guarantee the accuracy of all information included on this site, and we accept no liability.