SRS SIL

Lock washer for single pipe clamp

Properties

Design	for single pipe clamps
Series	light
Standard	DIN 3015-1
Material	Steel
Surface	electro galvanised

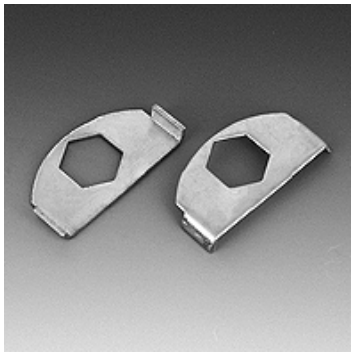

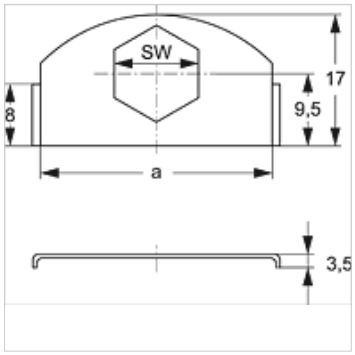

Description

for all clamp sizes from light series and the double pipe clamp.

Item

Identification	a (mm)	AF (mm)
SRS SI L	30	11

Additional element for following products

A 0 A	Configuration of group A 0 composition
A 1-6 A	Configuration of group A 1-6 composition

Despite careful checking, we cannot guarantee the accuracy of all information included on this site, and we accept no liability.