SRS 30-100 PP

Pipe clamp, heavy series

HANSA-FLEX

Properties

Design	Single pipe clamp
Construction type	Inside of clamp with web
Series	heavy
Standard	DIN 3015-2
Temp. min.	-30 °C
Temp. max.	90 °C
Material	Polypropylene



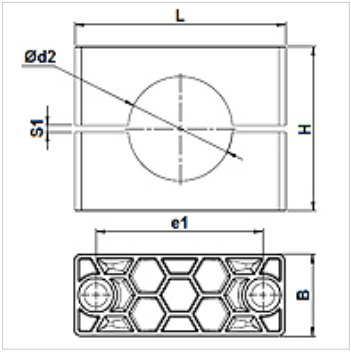

Note

The use of clamps with a smooth inner surface is recommended for retaining hoses and cables. No pretension is applied when fitting and the block height H is reduced to the gap width S1.

Description

Webs in the inner surface of the clamps dampen impacts and vibrations and absorb forces along the pipe axis.
A gap between the two halves pretensions the pipe.

Ordering information

1 piece = 2 halves of clamp

Item

Identification	Clamp size	External pipe Ø d2 (mm)	External pipe Ø d2	B (mm)	e1 (mm)	H (mm)	L (mm)	S1 (mm)
SRS 3006 PP	1	6,0	-	30	33	32	56	2
SRS 3008 PP	1	8,0	5/16"	30	33	32	56	2
SRS 3010 PP	1	10,0	-	30	33	32	56	2
SRS 3012 PP	1	12,0	-	30	33	32	56	2
SRS 3012.7 PP	1	12,7	1/2"	30	33	32	56	2
SRS 3013.5 PP	1	13,5	-	30	33	32	56	2
SRS 3014 PP	1	14,0	-	30	33	32	56	2
SRS 3015 PP	1	15,0	-	30	33	32	56	2
SRS 3016 PP	1	16,0	5/8"	30	33	32	56	2
SRS 3017.2 PP	1	17,2	-	30	33	32	56	2
SRS 3018 PP	1	18,0	-	30	33	32	56	2
SRS 4019 PP	2	19,0	3/4"	30	45	48	71	2
SRS 4020 PP	2	20,0	-	30	45	48	71	2
SRS 4021.3 PP	2	21,3	-	30	45	48	71	2
SRS 4022 PP	2	22,0	-	30	45	48	71	2
SRS 4023 PP	2	23,0	-	30	45	48	71	2
SRS 4025 PP	2	25,0	1"	30	45	48	71	2
SRS 4026.9 PP	2	26,9	-	30	45	48	71	2
SRS 4028 PP	2	28,0	-	30	45	48	71	2
SRS 4030 PP	2	30,0	-	30	45	48	71	2
SRS 5030 PP	3	30,0	-	30	60	60	86	2
SRS 5032 PP	3	32,0	1.1/4"	30	60	60	86	2
SRS 5033.7 PP	3	33,7	-	30	60	60	86	2
SRS 5035 PP	3	35,0	-	30	60	60	86	2
SRS 5038 PP	3	38,0	1.1/2"	30	60	60	86	2
SRS 5040 PP	3	40,0	-	30	60	60	86	2
SRS 5042 PP	3	42,0	-	30	60	60	86	2
SRS 6038 PP	4	38,0	1.1/2"	45	90	90	117	3
SRS 6040 PP	4	40,0	-	45	90	90	117	3
SRS 6042 PP	4	42,0	-	45	90	90	117	3
SRS 6045 PP	4	45,0	-	45	90	90	117	3
SRS 6048.3 PP	4	48,3	-	45	90	90	117	3
SRS 6050 PP	4	50,0	-	45	90	90	117	3
SRS 6051 PP	4	51,0	2"	45	90	90	117	3
SRS 6052 PP	4	52,0	-	45	90	90	117	3
SRS 6055 PP	4	55,0	-	45	90	90	117	3

Despite careful checking, we cannot guarantee the accuracy of all information included on this site, and we accept no liability.

SRS 30-100 PP

Pipe clamp, heavy series

HANSA FLEX

Item

Identification	Clamp size	External pipe Ø d2 (mm)	External pipe Ø d2	B (mm)	e1 (mm)	H (mm)	L (mm)	S1 (mm)
SRS 6057 PP	4	57,0	2.1/4"	45	90	90	117	3
SRS 6060.3 PP	4	60,3	-	45	90	90	117	3
SRS 6063 PP	4	63,0	2.1/2"	45	90	90	117	3
SRS 6065 PP	4	65,0	-	45	90	90	117	3
SRS 6070 PP	4	70,0	-	45	90	90	117	3
SRS 7070 PP	5	70,0	-	60	122	120	154	5
SRS 7073 PP	5	73,0	-	60	122	120	154	5
SRS 7075 PP	5	75,0	-	60	122	120	154	5
SRS 7076.1 PP	5	76,1	3"	60	122	120	154	5
SRS 7080 PP	5	80,0	-	60	122	120	154	5
SRS 7082.5 PP	5	82,5	3.1/4"	60	122	120	154	5
SRS 7088.9 PP	5	88,9	3.1/2"	60	122	120	154	5
SRS 7090 PP	5	90,0	-	60	122	120	154	5
SRS 8090 PP	6	90,0	-	80	168	170	205	6
SRS 8097 PP	6	97,0	-	80	168	170	205	6
SRS 8100 PP	6	100,0	-	80	168	170	205	6
SRS 8101.6 PP	6	101,6	4"	80	168	170	205	6
SRS 8108 PP	6	108,0	4.1/4"	80	168	170	205	6
SRS 8114.3 PP	6	114,3	4.1/2"	80	168	170	205	6
SRS 8127 PP	6	127,0	5"	80	168	170	205	6
SRS 9127 PP	7	127,0	5"	90	205	200	250	6
SRS 9133 PP	7	133,0	5.1/4"	90	205	200	250	6
SRS 9140 PP	7	140,0	5.1/2"	90	205	200	250	6
SRS 9150 PP	7	150,0	-	90	205	200	250	6
SRS 9152.4 PP	7	152,4	6"	90	205	200	250	6
SRS 9159 PP	7	159,0	6.1/4"	90	205	200	250	6
SRS 9165.1 PP	7	165,1	6.1/2"	90	205	200	250	6
SRS 9168.3 PP	7	168,3	6.5/8"	90	205	200	250	6
SRS 10168.3 PP	8	168,3	6.5/8"	120	265	270	320	6
SRS 10177.8 PP	8	177,8	7"	120	265	270	320	6
SRS 10193.7 PP	8	193,7	7.5/8"	120	265	270	320	6
SRS 10203 PP	8	203,0	-	120	265	270	320	6
SRS 10219.1 PP	8	219,1	8.5/8"	120	265	270	320	6
SRS 10220 PP	8	220,0	-	120	265	270	320	6

Product versions

SRS 30-100 AL	Pipe clamp, heavy series, Inside of clamp with web
SRS 30-100 PA	Pipe clamp, heavy series, Inside of clamp with web
SRS 30-100 PP G	Pipe clamp, heavy series, Inside of clamp, smooth
SRS 30-100 VG	Pipe clamp, heavy series, Inside of clamp with web

Additional element for following products

C D	Configuration of group C double
C A	Configuration of group C composition
C	Configuration of group C

Despite careful checking, we cannot guarantee the accuracy of all information included on this site, and we accept no liability.