PR V4 (Z)
Imperial precision steel pipe, 1.4571

HANSA-FLEX

Properties

Design	Precision steel pipe, imperial
Material	Stainless steel 1.4571
Pipe length	6 m

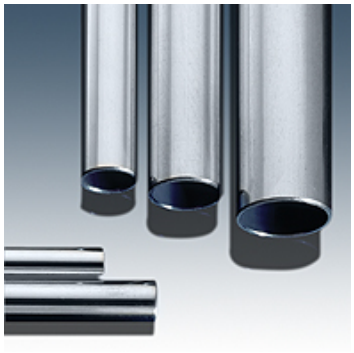

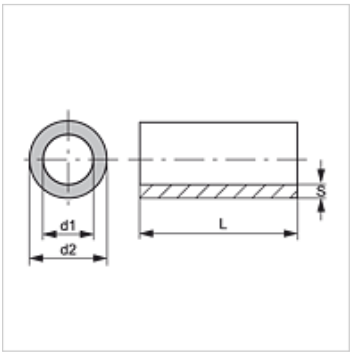

Note

The pressure figures are based on straight pipes.
The appropriate wall thickness needs to be calculated for pipes with bends as stipulated in DIN EN 13480-4.

Additional information

Calculation as in DIN 2413 (draft)
Specific load I: static (up to 100 °C)
Specific load III: dynamic (up to 200 °C) stress range = P bar
Strength parameter: K 234 [N/mm2]
Safety coefficient: S 1.5
Fatigue strength: σSch/D 190 [N/mm2]
Tolerance: DIN 10305-4
Elastic strength to DIN 10216-5 Rp 1.0 to 50°C

Item

Identification	Ø d2 (mm)	AD tolerance +/- (mm)	Ø d1 (mm)	ID tolerance +/- (mm)	S (mm)	Specific load I (bar)	Specific load III (bar)
PR 17.2-2.3 V4	17,20	0,08	12,60	0,15	2,30	375	272
PR 17.2-2.9 V4	17,20	0,08	11,40	0,15	2,90	375	272
PR 21.3-2 V4	21,30	0,08	17,30	0,08	2,00	269	201
PR 33.7-1.6 V4	33,70	0,08	30,50	0,15	1,60	126	98
PR 33.7-3.2 V4	33,70	0,08	27,30	0,15	3,20	274	205
PR 42.4-1.6 V4	42,40	0,08	39,20	0,20	1,60	97	76
PR 42.4-2 V4	42,40	0,20	38,40	0,20	2,00	117	92
PR 42.4-2.6 V4	42,40	0,20	37,20	0,20	2,60	161	124
PR 42.4-3.2 V4	42,40	0,20	36,00	0,20	3,20	206	156
PR 48.3-1.6 V4	48,30	0,20	45,10	0,20	1,60	77	61
PR 48.3-3.2 V4	48,30	0,20	41,90	0,20	3,20	180	138
PR 48.3-6.3 V4	48,30	-	35,70	-	6,30	-	-
PR 60.3-2.9 V4	60,30	0,25	54,50	0,30	2,90	121	95
PR 76.1-2.9 V4	76,10	0,35	70,30	0,35	2,90	90	71
PR 88.9-2.9 V4	88,90	0,40	83,10	0,45	2,90	71	57
PR 88.9-3.2 V4	88,90	0,40	82,50	0,45	3,20	82	65
PR 88.9-11.13 V4	88,90	0,70	66,64	0,70	11,13	347	249

Despite careful checking, we cannot guarantee the accuracy of all information included on this site, and we accept no liability.