PRT ORING

O-Ring for Perrot coupling



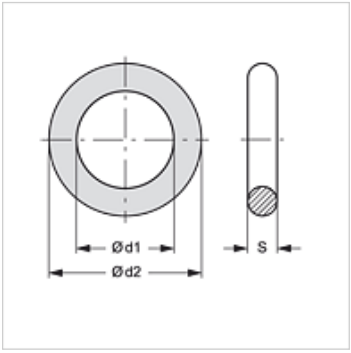

Item

Identification	Coupling dimension (mm)	Ø d1 (mm)	Ø d2 (mm)
PRT ORING 50	50,0	64	86
PRT ORING 70	70,0	87	110
PRT ORING 89	89,0	112	140
PRT ORING 108	108,0	124	160
PRT ORING 133	133,0	146	190
PRT ORING 159	159,0	180	224
PRT ORING 216	216,0	-	-

Despite careful checking, we cannot guarantee the accuracy of all information included on this site, and we accept no liability.