WA VBF VA

Connector ... VBF, VA

Properties

Application	Connection fitting for metal hoses
Connection 1	imperial internal thread, cylindrical
Sealing form 1	flat sealing
Standard	DIN EN 10226 / ISO 7-1
Construction	straight
Design	3-part threaded connection
Material	Stainless steel



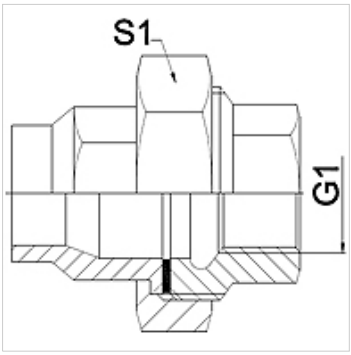

Note

Width across flats values are listed for reference purposes!

Ordering information

Other designs available on request

Item

Identification	DN	PN (bar)	G1	S1 (mm)
WA 004 VBF VA	4	25	Rp 1/8"	27,0
WA 006 VBFVA	6	25	Rp 1/4"	27,0
WA 010 VBF VA	10	25	Rp 3/8"	32,0
WA 013 VBF VA	13	25	Rp 1/2"	41,0
WA 020 VBF VA	20	25	Rp 3/4"	50,0
WA 025 VBF VA	25	25	Rp 1"	55,0
WA 032 VBF VA	32	16	Rp 1.1/4"	70,0
WA 040 VBF VA	40	16	Rp 1.1/2"	75,0
WA 050 VBF VA	50	16	Rp 2"	90,0
WA 065 VBF VA	65	10	Rp 2.1/2"	110,0

Product versions

WA VBF	Connector ... VBF, malleable cast iron, Malleable cast iron
WA VBF RG	Connector ... VBF, red bronze, Red bronze

Despite careful checking, we cannot guarantee the accuracy of all information included on this site, and we accept no liability.