WA VBF RG

Connector ... VBF, red bronze

Properties

Application	Connection fitting for metal hoses
Connection 1	imperial internal thread, cylindrical
Sealing form 1	flat sealing
Standard	DIN EN 10226 / ISO 7-1
Construction	straight
Application	soldered variant temperature resistant up to 200 °C
Design	3-part threaded connection
Material	Red bronze



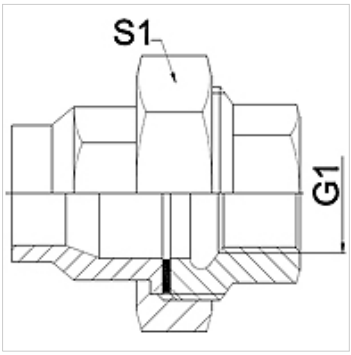

Note

Width across flats values are listed for reference purposes!

Ordering information

Other designs available on request

Item

Identification	DN	G1	S1 (mm)
WA 013 VBF RG	13	Rp 1/2"	30,0
WA 020 VBF RG	20	Rp 3/4"	37,0
WA 025 VBF RG	25	Rp 1"	46,0

Product versions

WA VBF	Connector ... VBF, malleable cast iron, Malleable cast iron
WA VBF VA	Connector ... VBF, VA, Stainless steel

Despite careful checking, we cannot guarantee the accuracy of all information included on this site, and we accept no liability.