WA VCF RG

Connector ... VCF, red bronze

Properties

Application	Connection fitting for metal hoses
Connection 1	imperial outer thread, conical
Sealing form 1	flat sealing
Standard	DIN EN 10226 / ISO 7-1
Application	soldered variant temperature resistant up to 200 °C
Construction	straight
Design	3-part threaded connection
Material	Red bronze



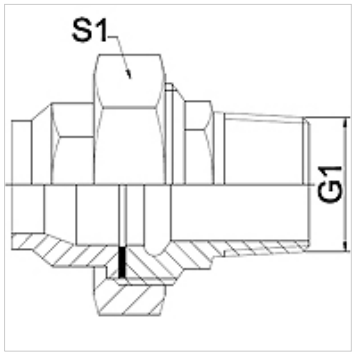

Note

Width across flats values are listed for reference purposes!

Ordering information

Other designs available on request

Item

Identification	DN	G1	S1 (mm)
WA 013 VCF RG	13	R 1/2"	28,0
WA 020 VCF RG	20	R 3/4"	32,0
WA 025 VCF RG	25	R 1"	42,0

Product versions

WA VCF	Connector ... VCF, malleable cast iron, Malleable cast iron
WA VCF VA	Connector ... VCF, VA, Stainless steel

Despite careful checking, we cannot guarantee the accuracy of all information included on this site, and we accept no liability.