PA 500 A 45 A

Swage fitting, DKM angle 45°

HANSA-FLEX

Properties

Application	Swage fitting for HD 500 hoses
Connection 1	metric nut thread
Sealing form 1	60° sealing head
Short code	DKM
Standard	DIN 3863
Integration	with pull-out protection (interlock)
Scope of supply	Swage nipple + swage ferrule
Material	Steel
Surface	electro galvanised



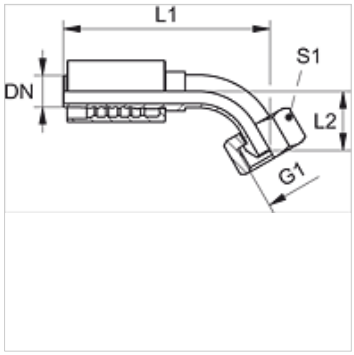

Item

Identification	DN	Size	Inches	Operating pressure	G1	L1 (mm)	L2 (mm)	S1
PA 532 A 45 A	31	20	1.1/4"	WP 63 bar	M 45 x 1.5	112,5	41,7	50
PA 540 A 45 A	38	24	1.1/2"	WP 63 bar	M 52 x 1.5	125,5	43,1	60
PA 550 A 45 A	51	32	2"	WP 40 bar	M 65 x 2	142,0	51,6	75

Despite careful checking, we cannot guarantee the accuracy of all information included on this site, and we accept no liability.