HK CTLM

Inserted piston for hydraulic cylinders

Properties

Material	Steel 9SMn28

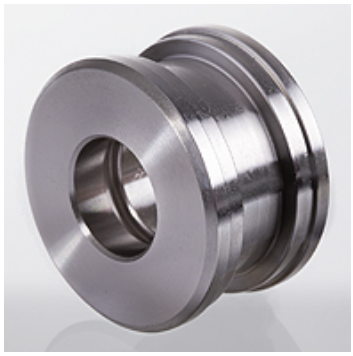

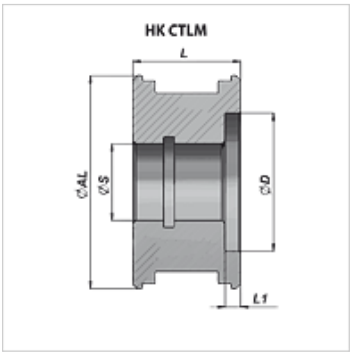

Note

Suitable packing sets can be supplied on request.

Item

Identification	Ø AL (mm)	Ø D (mm)	Ø S (mm)	L (mm)	L1 (mm)	Weight (kg)
HK CTLM 040 015 027	40	27,0	15	27	5	0,15
HK CTLM 050 021 030	50	36,0	21	30	5	0,25

Despite careful checking, we cannot guarantee the accuracy of all information included on this site, and we accept no liability.