HK 2P 4 FSRA

Gear pump, size 2 FSRA

Properties

Pitch circle pressure side	35 / M6
Pitch circle suction side	40 / M6
Material	Housing: Aluminium Front flange, end cover: Aluminium

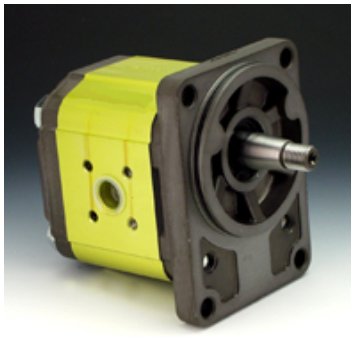

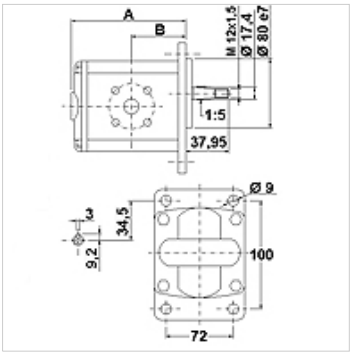

Description

German standard pump – hole pattern 100 x 72 – dia. 80 – taper 1:5 – flange fitting

Ordering information

Further pump versions available on request

Item

Identification	VFU (cc)	p1 max. (bar)	p2 max. (bar)	p3 max. (bar)	A (mm)	B (mm)	Direction of rotation	Speed min. (rpm)	Speed max. (rpm)	Weight (kg)
HK 2P 41 41 FSRA	4,2	260	280	300	87,2	47,1	anti-clockwise rotating	700	3500	2,33
HK 2P 41 42 FSRA	4,2	260	280	300	87,2	47,1	clockwise rotating	700	3500	2,33
HK 2P 43 41 FSRA	6,0	260	280	300	90,2	41,1	anti-clockwise rotating	700	3500	2,43
HK 2P 43 42 FSRA	6,0	260	280	300	90,2	41,1	clockwise rotating	700	3500	2,43
HK 2P 45 41 FSRA	8,4	260	280	300	94,2	51,5	anti-clockwise rotating	700	3500	2,53
HK 2P 45 42 FSRA	8,4	260	280	300	94,2	51,5	clockwise rotating	700	3500	2,53
HK 2P 47 41 FSRA	10,8	260	280	300	98,2	47,5	anti-clockwise rotating	700	3500	2,63
HK 2P 47 42 FSRA	10,8	260	280	300	98,2	47,5	clockwise rotating	700	3500	2,63
HK 2P 49 41 FSRA	14,4	250	270	290	104,2	47,5	anti-clockwise rotating	700	3500	2,73
HK 2P 49 42 FSRA	14,4	250	270	290	104,2	47,5	clockwise rotating	700	3500	2,73
HK 2P 51 41 FSRA	16,8	230	250	270	108,2	47,5	anti-clockwise rotating	700	3500	2,83
HK 2P 51 42 FSRA	16,8	230	250	270	108,2	47,5	clockwise rotating	700	3500	2,83
HK 2P 53 41 FSRA	19,2	210	230	250	112,2	47,5	anti-clockwise rotating	700	3000	2,93
HK 2P 53 42 FSRA	19,2	210	230	250	112,2	47,5	clockwise rotating	700	3000	2,93
HK 2P 55 41 FSRA	22,8	200	220	240	118,2	55,0	anti-clockwise rotating	700	3000	3,18
HK 2P 55 42 FSRA	22,8	200	220	240	118,2	55,0	clockwise rotating	700	3000	3,18
HK 2P 57 41 FSRA	26,2	170	190	210	124,7	55,0	anti-clockwise rotating	700	3000	3,28
HK 2P 57 42 FSRA	26,2	170	190	210	124,7	55,0	clockwise rotating	700	3000	3,28

VFU = conveying volume per revolution – p1 = continuous pressure – p2 = working pressure – p3 = maximum pressure

Accessories

GF LK	Pump connection (4 hole)
GF LK M	Pump connection (4 hole)
W VA W90	Fitting, angle 90°

Despite careful checking, we cannot guarantee the accuracy of all information included on this site, and we accept no liability.