HK SMP

Flat cylinders 700 bar single-acting with spring retraction

Properties

Design	Hardened valvehead hard chrome-plated pistons max. stroke 150 mm spring return
Operating pressure	max. 700 bar
Material	Steel
Scope of supply	with female quick coupling 3/8"-18 NPT



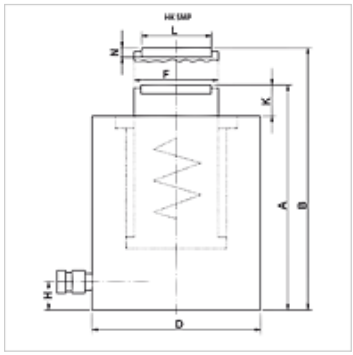

Note

Attention: Please observe separate safety precautions for working with 700 bar equipment (see technical information)!

Description

Flat cylinders combine compact design with maximum stroke. Ideal where space is at a premium.
Care must be taken that no lateral forces are transmitted to the guide rings.
Flat, compact design
Mounting bores for stationary applications

Ordering information

Moving thrust pieces are available on request for the HK SMP models from 30 to 100 t.

Item

Identification			Stroke	Area	A	B	D	F	H	K	L	N	Volume	Weight
	(kN)	(t)	(mm)	(cm2)	(mm)	(mm)	(mm)	(mm)	(mm)	(mm)	(mm)	(mm)	(cc)	(kg)
HK SMP 01004	109,0	10	40	15,9	89	129	66	36	14	2	-	-	64	2,3
HK SMP 02004	214,0	20	40	31,2	101	141	90	56	14	2	-	-	125	4,7
HK SMP 03006	303,0	30	40	44,2	121	161	102	60	14	2	45,5	9,0	177	8,0
HK SMP 05006	486,0	50	60	70,8	125	185	127	80	16	2	61,5	11,5	425	11,0
HK SMP 10006	911,0	100	60	132,7	141	201	175	110	26	2	88,0	12,0	796	23,9
HK SMP 10015	911,0	100	150	132,7	254	404	175	110	26	5	88,0	11,0	1990	40,2

Accessories

NY 2100	Thermoplastic extreme pressure hose
GKS	Rubber antikink protection
PNY 2100 HN	Swage nipple, AGN
PHY 2100	Swage ferrule, NY 2100
SKL HN SP	Screwed coupling, loose half
SKL ZUBS SP	Dust protection for SKL...SP
SKF IN SP	Screwed coupling fixed half
SKF ZUBS SP	Dust protection for SKF...SP

Despite careful checking, we cannot guarantee the accuracy of all information included on this site, and we accept no liability.