HK SU 3
Pump supports

Properties

Use	For European standard gear pumps BG3



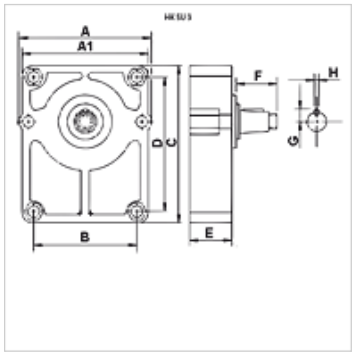

Description

Pump supports are employed on gear pumps that are driven e.g. by V-belts or chains and are thus subject to higher radial loads.
A corresponding coupling hub is required for the connection between pump and pump support. (Please order separately!)
Grease according to DIN 51502 is recommended for lubrication.
Connection only for European standard pumps.

Item

Identification	for pump	A (mm)	A1 (mm)	B (mm)	C (mm)	D (mm)	E (mm)	F (mm)	G (mm)	H (mm)	Hub	Shaft	Weight (kg)
HK SU 3 C	BG 3 European Standard	124,5	120,0	98,2	150	128	52	48,0	12,0	8	HK BF 3	Cylindrical dia. 24	2,20
HK SU 3 D	BG 3 European Standard	124,5	120,0	98,2	150	128	52	43,0	12,0	4	HK BF 3	Conical shaft 1:8	2,20

Hub = required coupling hub – BG2/BG3 - European standard pump

Accessories

HK BF	Coupling hub

Despite careful checking, we cannot guarantee the accuracy of all information included on this site, and we accept no liability.