WA AFL-VRK

Connector ... AFL-VRK, steel

Properties

Application	Connection fitting for metal hoses
Connection 1	imperial outer thread, conical
Sealing form 1	conical seat
Standard	DIN EN 10226 / ISO 7-1
Construction	straight
Design	3-part threaded connection
Material	Steel



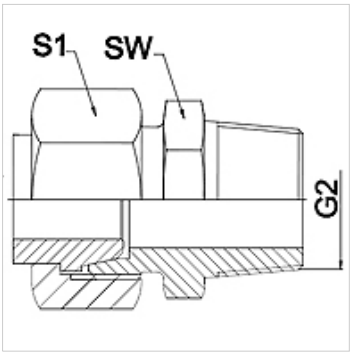

Note

Width across flats values are listed for reference purposes!

Ordering information

Other designs available on request

Item

Identification	DN	PN (bar)	G2	AF (mm)	S1 (mm)
WA 006 AFL-VRK	6	250	R 1/4"	17	17,0
WA 008 AFL-VRK	8	250	R 1/4"	17	19,0
WA 010 AFL-VRK	10	250	R 3/8"	24	22,0
WA 013 AFL-VRK	13	250	R 1/2"	27	27,0
WA 016 AFL-VRK	16	160	R 1/2"	27	32,0
WA 020 AFL-VRK	20	160	R 3/4"	36	36,0
WA 025 AFL-VRK	25	100	R 1"	41	41,0
WA 032 AFL-VRK	32	100	R 1.1/4"	50	50,0
WA 040 AFL-VRK	40	100	R 1.1/2"	60	60,0

Product versions

WA AFL-VRK VA	Connector ... AFL-VRK, VA, Stainless steel

Despite careful checking, we cannot guarantee the accuracy of all information included on this site, and we accept no liability.