WA AFL-VR

Connector ... AFL-VR, steel

Properties

Application	Connection fitting for metal hoses
Connection 1	BSP external thread, cylindrical
Sealing form 1	conical seat
Standard	ISO 228-1
Construction	straight
Design	3-part threaded connection
Material	Steel



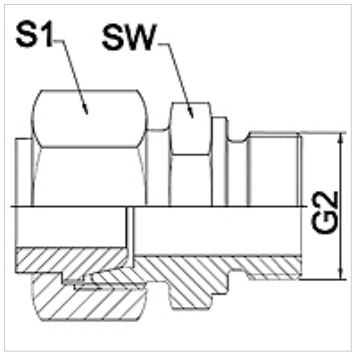

Note

Width across flats values are listed for reference purposes!

Ordering information

Other designs available on request

Item

Identification	DN	PN (bar)	G2	AF (mm)	S1 (mm)
WA 006 AFL-VR	6	250	G 1/4" -19	19	17,0
WA 008 AFL-VR	8	250	G 1/4" -19	19	19,0
WA 010 AFL-VR	10	250	G 3/8" -19	22	22,0
WA 013 AFL-VR	13	250	G 1/2" -14	27	27,0
WA 016 AFL-VR	16	160	G 1/2" -14	27	32,0
WA 020 AFL-VR	20	160	G 3/4" -14	32	36,0
WA 025 AFL-VR	25	100	G 1" -11	41	41,0
WA 032 AFL-VR	32	100	G 1.1/4" -11	50	50,0
WA 040 AFL-VR	40	100	G 1.1/2" -11	55	60,0

Product versions

WA AFL-VR VA	Connector ... AFL-VR, VA, Stainless steel

Despite careful checking, we cannot guarantee the accuracy of all information included on this site, and we accept no liability.