PA 500 AOL 90 A

Swage fitting DKOL W90°

Properties

Application	Swage fitting for HD 500 hoses
Connection 1	metric nut thread
Sealing form 1	24° outer cone with O-ring
Short code	DKOL
Standard	ISO 8434-1
Integration	with pull-out protection (interlock)
Scope of supply	Swage nipple + swage ferrule
Material	Steel
Surface	electro galvanised



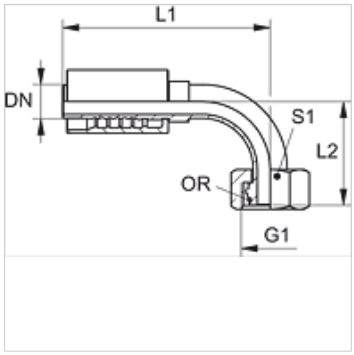

Item

Identification	DN	Size	Inches	G1	for external pipe Ø (mm)	L1 (mm)	L2 (mm)	S1	OR
PA 532 AOL 90 A	31	20	1.1/4"	M 45 x 2	35	170,0	88,0	50	32.0 x 2.5
PA 540 AOL 90 A	38	24	1.1/2"	M 52 x 2	42	193,0	99,0	60	38.0 x 2.5

Product versions

PA 500 AOL 90 VA

Despite careful checking, we cannot guarantee the accuracy of all information included on this site, and we accept no liability.