DG D H

Rotary fitting 2x 90°, friction bearing

Properties

Connection 1	metric cylindrical outer thread
Sealing form 1	24° inner cone
Connection 2	metric cylindrical outer thread
Sealing form 2	24° inner cone
Design	Rotary fitting
Construction	Double angle 90°
Scope of supply	Socket (without union nut and cutting ring)
Material	Steel
Surface	electro galvanised



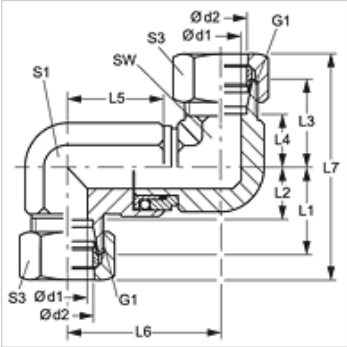

Note

Information about fitting, installation, pressure loads and permissible operating temperatures can be found in the technical information for pipe fittings.

Item

Identification	Series	Operating pressure	Ø d2 (mm)	G1	L1 (mm)	L2 (mm)	L3 (mm)	L4 (mm)	L6 (mm)	AF (mm)
DG D NW 08 HS H	S	PN 400	12	M 20 x 1.5	28	20,5	28	20,5	32	32
DG D NW 13 HS H	S	PN 400	16	M 24 x 1.5	34	25,5	34	25,5	40	40
DG D NW 16 HS H	S	PN 250	20	M 30 x 2	38	27,5	38	27,5	45	45
DG D NW 20 HS H	S	PN 250	25	M 36 x 2	45	33,0	45	33,0	55	55
DG D NW 25 HS H	S	PN 250	30	M 42 x 2	52	38,5	52	38,5	65	65
DG D NW 32 HS H	S	PN 250	38	M 52 x 2	59	43,0	59	43,0	75	75

Series: LL = Very light L = Light S = Heavy – PN = Nominal pressure PB = Max. operating pressure – Ø d2 = External pipe diameter

Despite careful checking, we cannot guarantee the accuracy of all information included on this site, and we accept no liability.