HK B5 230/400V IE2

Electric motor B5 230/400V IE2

Properties

Design	type B5 without feet
Protection IP	IP 55
Ambient temperature	-20 °C to +40 °C
Material	Housing: Aluminium



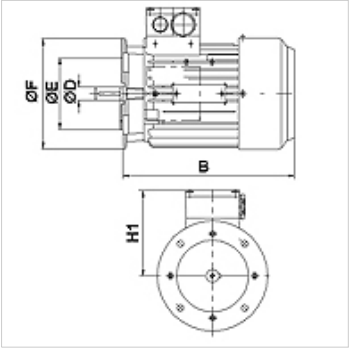

Description

Self-cooling squirrel-cage energy-saving motors
High efficiency IE2 - IEC60034-30:2008
Rated voltage 230/400V 50Hz, 460V 60Hz; 4-pin
Voltage tolerance +- 5%

Item

Identification	n 50 Hz (rpm)	n 60 Hz (rpm)	P 50 Hz (kW)	P 60 Hz (kW)	I 50 Hz (A)	LF 50 Hz	H1 (mm)	B (mm)	C (mm)	Ø D shaft (mm)	Ø E (mm)	Ø F (mm)	η (IE2) %	Weight (kg)
HK 80M4 B5 2-4 IE2	1400	1700	0,75	0,86	1,81	0,75	120	268	200	19	130	200	79,6	12,3
HK 90L4 B5 2-4 IE2	1440	1740	1,50	1,75	3,40	0,77	128	326	218	24	130	200	82,8	18,0
HK 100LA4 B5 2-4 IE2	1455	1755	2,20	2,55	4,65	0,81	166	336	266	28	215	250	84,3	21,0
HK 100LB4 B5 2-4 IE2	1455	1755	3,00	3,45	6,20	0,82	166	336	266	28	215	250	85,5	25,0

P 50 Hz = nominal output at 400 V/50 Hz – P 60 Hz = nominal output at 400 V/60 Hz – n 50 Hz = nominal speed at 400 V/50 Hz – n 60 Hz = nominal speed at 400 V/60 Hz – I 50 Hz = nominal current at 400 V/50 Hz – LF 50 Hz = cos phi power factor at 50 Hz – η (IE2) = efficiency to IE2 in % (at full load)

Despite careful checking, we cannot guarantee the accuracy of all information included on this site, and we accept no liability.