PA 700 SF6 90 PLUS

Swage fitting, SFS angle 90°

HANSA-FLEX

Properties

Application	Swage fitting for HD 700 PLUS hoses
Connection 1	SAE flange connection 6000 PSI
Sealing form 1	flat seal with SF O-ring
Short code	SFS
Standard	SAE J518 ISO 6162-2
Integration	with pull-out protection (interlock)
Scope of supply	Swage nipple + swage ferrule
Material	Steel
Surface	electro galvanised



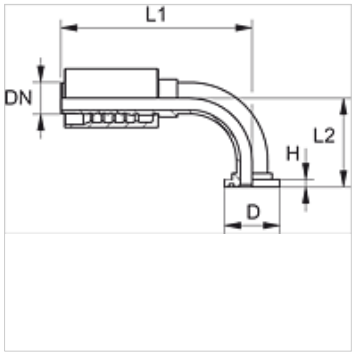

Item

Identification	DN	Size	Inches	Flange size	Operating pressure (bar)	D (mm)	H (mm)	L1 (mm)	L2 (mm)
PA 720 SF6 90 PLUS	19	12	3/4"	3/4"	420,0	41,3	8,8	124,8	86,0
PA 720 SF6 90 L 60 PLUS	19	12	3/4"	3/4"	420,0	41,3	8,8	124,8	60,0
PA 720 SF6 25 90 PLUS	19	12	3/4"	1"	420,0	47,6	9,6	128,4	86,0
PA 725 SF6 90 L 75 PLUS	25	16	1"	1"	420,0	47,6	9,6	155,6	75,0
PA 725 SF6 90 L 80 PLUS	25	16	1"	1"	420,0	47,6	9,6	144,2	80,0
PA 725 SF6 90 L 86 PLUS	25	16	1"	1"	420,0	47,6	9,6	155,6	86,0
PA 725 SF6 90 L 100 PLUS	25	16	1"	1"	420,0	47,6	9,6	155,6	100,0
PA 725 SF6 90 L 110 PLUS	25	16	1"	1"	420,0	47,6	9,6	155,6	110,0
PA 725 SF6 90 L 130 PLUS	25	16	1"	1"	420,0	47,6	9,6	155,6	130,0
PA 725 SF6 32 90 PLUS	25	16	1"	1.1/4"	420,0	54,0	10,5	174,7	89,0
PA 725 SF6 32 90 L 100 PL	25	16	1"	1.1/4"	420,0	54,0	10,5	174,7	100,0
PA 732 SF6 90 PLUS	31	20	1.1/4"	1.1/4"	420,0	54,0	10,5	185,0	120,0
PA 732 SF6 90 L 90 PLUS	31	20	1.1/4"	1.1/4"	420,0	54,0	10,5	185,0	90,0
PA 732 SF6 90 L 95 PLUS	31	20	1.1/4"	1.1/4"	420,0	54,0	10,5	185,0	95,0
PA 732 SF6 90 L 150 PLUS	31	20	1.1/4"	1.1/4"	420,0	54,0	10,5	185,0	150,0
PA732 SF6 90 L 180 PLUS	31	20	1.1/4"	1.1/4"	420,0	54,0	10,5	168,5	180,0
PA 740 SF6 32 90 PLUS	38	24	1.1/2"	1.1/4"	420,0	54,0	10,5	195,0	85,0
PA 740 SF6 32 90 L 120 PL	38	24	1.1/2"	1.1/4"	420,0	54,0	10,5	195,0	120,0
PA 740 SF6 90 PLUS	38	24	1.1/2"	1.1/2"	420,0	63,5	12,6	234,0	140,0
PA 750 SF6 90 PLUS	51	32	2"	2"	420,0	79,4	12,6	281,6	150,0

Despite careful checking, we cannot guarantee the accuracy of all information included on this site, and we accept no liability.