KS FIX AL

Clamping shell for pinning, aluminium

HANSA-FLEX

Properties

Application	Integrating clamp ring fittings with hose
Design	Clamping shells
Construction type	for pinning
Material	Aluminium



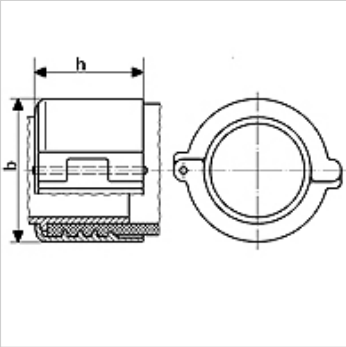

Item

Identification	for hose	Clamping range (mm)	Max. working pressure (bar)	b (mm)	h (mm)
KS 36-39 FIX AL	25 x 6	36 - 39	16	58	46
KS 43-46 FIX AL	32 x 6	43 - 46	16	66	48
KS 50-53 FIX AL	38 x 6.5	50 - 53	16	73	52
KS 63-67 FIX AL	50 x 8	63 - 67	16	89	56
KS 89-94 FIX AL	75 x 8	89 - 94	16	118	76

Despite careful checking, we cannot guarantee the accuracy of all information included on this site, and we accept no liability.