PA 700 SK6 PLUS

Swage fitting, SK6

HANSA-FLEX

Properties

Application	Swage fitting for HD 700 PLUS hoses
Connection 1	SAE flange connection 6000 PSI
Sealing form 1	flat seal with SF O-ring
Integration	with pull-out protection (interlock)
Scope of supply	Swage nipple + swage ferrule
Additional feature	cone SAE fitting
Material	Steel
Surface	electro galvanised



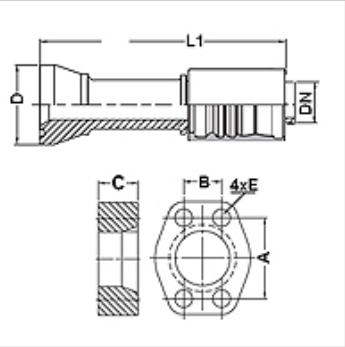

Item

Identification	DN	Size	Inches	Flange size	D (mm)	M metr.	L1 (mm)	A (mm)	B (mm)	C (mm)	E (mm)
PA 720 SK6 PLUS	19	12	3/4"	3/4"	43,5	M 10 x 45	117,5	50,8	23,8	25,0	11
PA 725 SK6 PLUS	25	16	1"	1"	49,4	M 12 x 50	134,0	57,2	23,8	27,0	13
PA 725 SK6 32 PLUS	25	16	1"	1.1/4"	57,4		134,0	66,6	31,8	32,0	15
PA 732 SK6 PLUS	31	20	1.1/4"	1.1/4"	57,4		197,0	66,6	31,8	32,0	15
PA 740 SK6 32 PLUS	38	24	1.1/2"	1.1/4"	57,4		200,0	66,6	31,8	32,0	15
PA 740 SK6 PLUS	38	24	1.1/2"	1.1/2"	68,4		203,0	79,3	36,5	40,0	17
PA 740 SK6 50 PLUS	38	24	1.1/2"	2"	83,5		225,0	96,8	44,5	50,0	21
PA 750 SK6 40 PLUS	51	32	2"	1.1/2"	68,4		233,0	79,3	36,5	40,0	17
PA 750 SK6 PLUS	51	32	2"	2"	83,5		233,0	96,8	44,5	50,0	21

Accessories

FS	Seal for SAE and ISO flanges
SCHRAUBE M	Hexagon socket screw
SCHRAUBE M VZ	Hexagon socket screw

Despite careful checking, we cannot guarantee the accuracy of all information included on this site, and we accept no liability.