PA 700 SK6 120 PLUS

Swage fitting, SK6 angle 120°

HANSA-FLEX

Properties

Application	Swage fitting for HD 700 PLUS hoses
Connection 1	SAE flange connection 6000 PSI
Sealing form 1	flat seal with SF O-ring
Integration	with pull-out protection (interlock)
Scope of supply	Swage nipple + swage ferrule
Additional feature	cone SAE fitting
Material	Steel
Surface	electro galvanised



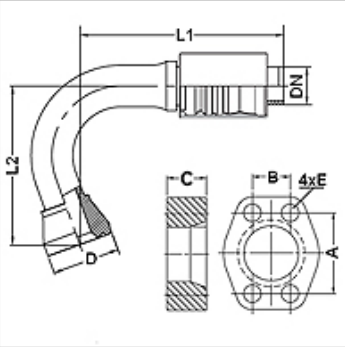

Item

Identification	DN	Size	Inches	Flange size	D (mm)	M metr.	L1 (mm)	L2 (mm)	A (mm)	B (mm)	C (mm)	E (mm)
PA 740 SK6 120 PLUS	38	24	1.1/2"	1.1/2"	68,4		178,0	185,0	79,3	36,5	40,0	17

Accessories

FS	Seal for SAE and ISO flanges
SCHRAUBE M	Hexagon socket screw
SCHRAUBE M VZ	Hexagon socket screw

Despite careful checking, we cannot guarantee the accuracy of all information included on this site, and we accept no liability.