# PA 800 SF6 60

Swage fitting, SFS angle 60°

HANSA-FLEX

## Properties

| | |
|---|---|
| **Application** | Swage fitting for HD 800 hoses |
| **Connection 1** | SAE flange connection 6000 PSI |
| **Sealing form 1** | flat seal with SF O-ring |
| **Standard** | SAE J518<br>ISO 6162-2 |
| **Short code** | SFS |
| **Integration** | with pull-out protection (interlock) |
| **Scope of supply** | Swage nipple + swage ferrule |
| **Material** | Steel |
| **Surface** | electro galvanised |



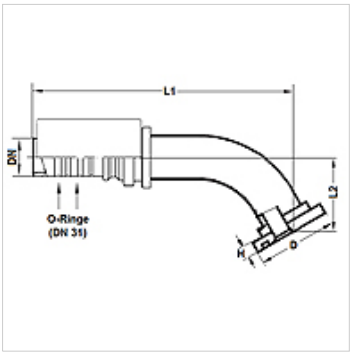


## Note

Added innovative and unique new O-ring seal 27,3mm x 2,4mm (Material:EPDM)to the -20 size nipples. The O-ring design prevents fluid migration thus providing zero leakage as measured to SAE and EN specifications

## Item

| Identification | DN | Size | Inches | Flange size | D (mm) | H (mm) | L1 (mm) | L2 (mm) | Operating pressure (bar) |
|---|---|---|---|---|---|---|---|---|---|
| **PA 832 SF6 60** | 31 | 20 | 1.1/4" | 1.1/4" | 54,0 | 10,4 | 224,1 | 60,0 | 500,0 |

*Despite careful checking, we cannot guarantee the accuracy of all information included on this site, and we accept no liability.*