HK ES5 NG10

Single connection plate with relief valve size 10

Properties

Scope of supply	incl. blind plug with pressure relief valve
Material	Material: Steel (350 bar)
Connection	ISO/Cetop 05 size 10



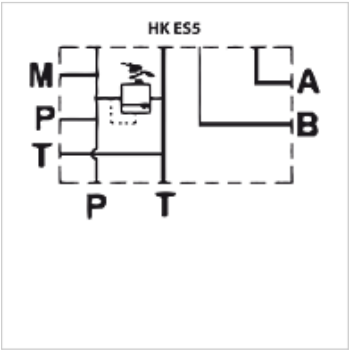

Note

These plates have double P- and T-ports. Ports not needed can be closed off with blind plugs.

Item

Identification	Stations	Connections A + B	Connections P + T	Height (mm)	Width (mm)	Pressure setting range bar	Length (mm)	Weight (kg)
HK ES5 B34 PL X2 F	Single connection	G 3/4"-side	G 3/4"-side and bottom	74	104	35 - 120	125	7,0
HK ES5 B34 PL X3 F	Single connection	G 3/4"-side	G 3/4"-side and bottom	74	104	80 - 270	125	7,0

Accessories

VERSCHLUSS HRO	Blanking socket, with hexagon head

Despite careful checking, we cannot guarantee the accuracy of all information included on this site, and we accept no liability.