WFG HJOF (3000 PSI)

SAE flange adapterr ORFS angle 90°

HANSA-FLEX

Properties

Pressure series	3000 psi
Construction	Angle 90°
Design	SAE external thread flange
Scope of supply	flange only
Material	Steel
Surface	electro galvanised



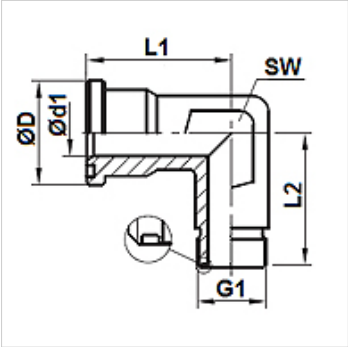

Item

Identification	Pressure PB (bar)	Size	G1	Ø D (mm)	Ø d1 (mm)	L1 (mm)	L2 (mm)	AF (mm)
WFG 3002 HJOF 12	350	3/4"	1.3/16" -12 UN	38,3	15,5	42,0	45,0	30
WFG 3003 HJOF 16	315	1"	1.7/16" -12 UN	44,7	20,5	45,0	50,0	36
WFG 3004 HJOF 20	250	1.1/4"	1.11/16" -12 UN	51,0	26,0	50,0	59,0	41
WFG 3005 HJOF 24	200	1.1/2"	2" -12 UN	60,5	32,0	55,0	64,0	50

Despite careful checking, we cannot guarantee the accuracy of all information included on this site, and we accept no liability.