WFG HJOF (6000 PSI)

SAE flange adapterr ORFS angle 90°

HANSA-FLEX

Properties

Pressure series	6000 psi
Construction	Angle 90°
Design	SAE external thread flange
Scope of supply	flange only
Material	Steel
Surface	electro galvanised



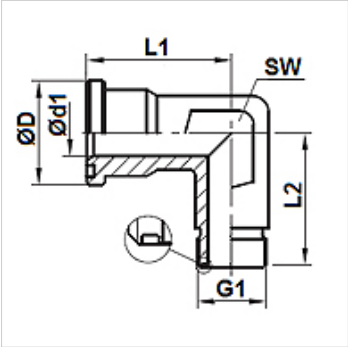

Item

Identification	Pressure PB (bar)	Size	G1	Ø D (mm)	Ø d1 (mm)	L1 (mm)	L2 (mm)	AF (mm)
WFG 6002 HJOF 12	400	3/4"	1.3/16" -12 UN	41,5	15,5	48,0	48,0	32
WFG 6003 HJOF 16	400	1"	1.7/16" -12 UN	47,8	20,5	60,0	55,0	41
WFG 6004 HJOF 20	350	1.1/4"	1.11/16" -12 UN	54,2	26,0	68,0	61,0	46
WFG 6005 HJOF 24	310	1.1/2"	2" -12 UN	63,7	32,0	76,0	72,0	50

Despite careful checking, we cannot guarantee the accuracy of all information included on this site, and we accept no liability.