FS
Seal for SAE and ISO flanges

HANSA-FLEX

Properties

Operating pressure	up to 500 bar
Temp. min.	-40 °C
Temp. max.	120 °C
Media	Mineral oils
Material	Polyurethane 93 Shore A



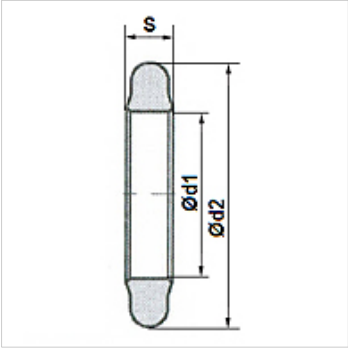

Item

Identification	Flange size	d1 (mm)	d2 (mm)	S (mm)
FS-08	1/2"	18,40	25,40	3,53
FS-12	3/4"	24,80	31,80	3,53
FS-16	1"	32,70	39,70	3,53
FS-20	1.1/4"	37,50	44,50	3,53
FS-24	1.1/2"	46,80	53,80	3,53
FS-32	2"	56,40	63,40	3,53
FS-40	2.1/2"	69,40	76,20	3,53
FS-48	3"	85,30	91,90	3,53

Despite careful checking, we cannot guarantee the accuracy of all information included on this site, and we accept no liability.