SAE O-RING V

Properties

Temp. min.	-15 °C
Temp. max.	200 °C
Material	FKM SH 90 (Viton)



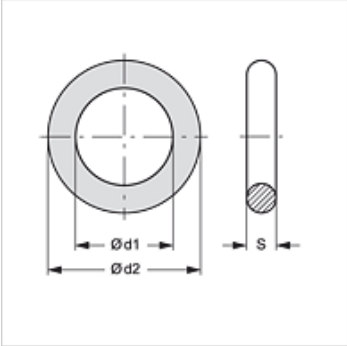

Item

Identification	Flange size	Ø d1 (mm)	S (mm)
SAE O-RING 1/2 V	1/2"	18,64	3,53
SAE O-RING 3/4 V	3/4"	24,99	3,53
SAE O-RING 1 V	1"	32,92	3,53
SAE O-RING 11/4 V	1.1/4"	37,69	3,53
SAE O-RING 11/2 V	1.1/2"	47,22	3,53
SAE O-RING 2 V	2"	56,74	3,53
SAE O-RING 21/2 V	2.1/2"	69,44	3,53
SAE O-RING 3 V	3"	85,32	3,53
SAE O-RING 31/2 V	3.1/2"	98,02	3,53
SAE O-RING 4 V	4"	110,72	3,53

Product versions

SAE O-RING	SAE O-ring, NBR SH 90

Despite careful checking, we cannot guarantee the accuracy of all information included on this site, and we accept no liability.