FI BL FP
Tank venting filters

HANSA-FLEX

Properties

Design	Flange mounting on the tank, with filler screen Typ FI BL 080 F P10 003 lockable
Temp. min.	-25 °C
Temp. max.	100 °C
Material	Chrome-plated steel, cork gasket
Filter material	non-organic



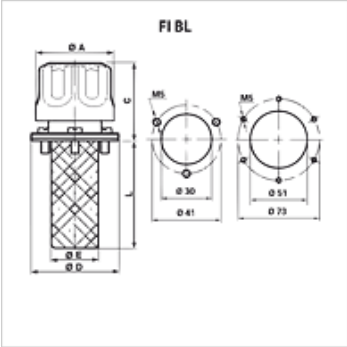

Item

Identification	Filter mesh size (µm)	Air volume (L/min)	B (mm)	Mounting	C (mm)	L (mm)	Bolt circle (mm)	Ø A (mm)	Ø D (mm)	Ø E (mm)	Tank bore	Weight (kg)
FI BL 046 F P03 002	3	150	110	3 x M5	46	64,0	41	46,00	52	28	30 mm	0,10
FI BL 046 F P10 002	10	200	110	3 x M5	46	64,0	41	46,00	52	28	30 mm	0,10
FI BL 080 F P03 080	3	450	141	6 x M5	61	80,0	73	80,00	83	50	51 mm	0,33
FI BL 080 F P03 150	3	450	211	6 x M5	61	150,0	73	80,00	83	50	51 mm	0,33
FI BL 080 F P10 003	10	550	141	6 x M5	61	80,0	73	80,00	83	50	51 mm	0,33
FI BL 080 F P10 080	10	550	141	6 x M5	61	80,0	73	80,00	83	50	51 mm	0,33
FI BL 080 F P10 150	10	550	211	6 x M5	61	150,0	73	80,00	83	50	51 mm	0,33

Accessories

FI BL SS	Kit baffle for tank ventilation filter

Despite careful checking, we cannot guarantee the accuracy of all information included on this site, and we accept no liability.