PA 800 HS

HANSA-FLEX

Properties

Application	Swage fitting for HD 800 hoses
Connection 1	metric cylindrical outer thread
Sealing form 1	24° inner cone
Standard	ISO 8434-1
Short code	CES
Integration	with pull-out protection (interlock)
Scope of supply	Swage nipple + swage ferrule
Material	Steel
Surface	electro galvanised



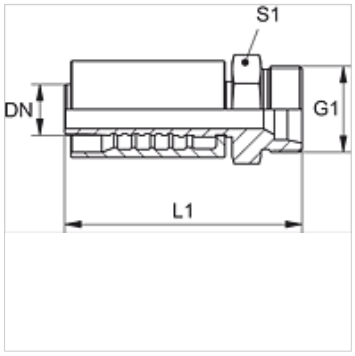

Note

Added innovative and unique new O-ring seal 27,3mm x 2,4mm (Material:EPDM)to the -20 size nipples. The O-ring design prevents fluid migration thus providing zero leakage as measured to SAE and EN specifications

Item

Identification	DN*	Size	Inches	G1	for external pipe Ø (mm)	L1 (mm)	S1	Operating pressure (bar)
PA 816 HS	16	10	5/8"	M 30 x 2	20	86,4	32	500,0
PA 820 HS	19	12	3/4"	M 36 x 2	25	88,4	41	500,0
PA 825 HS	25	16	1"	M 42 x 2	30	110,0	46	500,0
PA 832 HS	31	20	1.1/4"	M 52 x 2	38	124,4	55	500,0

Despite careful checking, we cannot guarantee the accuracy of all information included on this site, and we accept no liability.