HK B3/B5 400/690V IE3

Electric motor B3/B5 400/690V IE3

Properties

Design	type B3/B5 feet removable Feet fixed (from HK160M4 ***)
Protection IP	IP 55
Ambient temperature	-20 °C to +40 °C
Material	Housing: Aluminium Housing: Grey cast iron (from HK180L4***)



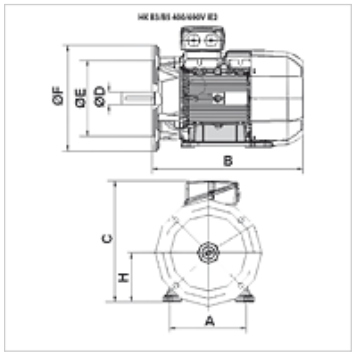

Description

Self-cooling squirrel-cage energy-saving motors
High efficiency IE3 - IEC60034-30:2009
Rated voltage 400/690V 50Hz, 460V 60Hz; 4-pin
Voltage tolerance +- 5%
Above 11 kW incl. temperature protection (PTC thermistor)

Item

Identification	n 50 Hz (rpm)	n 60 Hz (rpm)	P 50 Hz (kW)	P 60 Hz (kW)	I 50 Hz (A)	LF 50 Hz	A (mm)	H (mm)	B (mm)	C (mm)	Ø D shaft (mm)	Ø E (mm)	Ø F (mm)	η (IE3) %	Weight (kg)
HK 112M4 B35 4-6 IE3	1440	1728	4,00	4,60	14,00	0,80	190	112	340	292	28	180	250	88,6	38,0
HK 132SB4 B35 4-6 IE3	1460	1752	5,50	6,30	11,10	0,80	216	132	380	322	38	230	300	89,6	50,0
HK 132M4 B35 4-6 IE3	1470	1770	7,50	8,60	14,30	0,84	216	132	453	357	38	230	300	90,4	49,0
HK 160M4 B35 4-6 IE3	1470	1770	11,00	12,60	20,60	0,84	254	160	545	420	42	250	350	91,4	132,0
HK 160L4 B35 4-6 IE3	1470	1770	15,00	17,30	27,60	0,86	254	160	550	420	42	250	350	92,1	150,0
HK 180M4 B35 4-6 IE3	1475	1775	18,50	21,30	33,80	0,86	279	180	628	460	48	250	350	92,6	160,0
HK 180L4 B35 4-6 IE3	1475	1775	22,00	25,30	40,00	0,86	279	180	668	460	48	250	350	93,0	185,0
HK 200L4 B35 4-6 IE3	1475	1775	30,00	34,50	54,30	0,86	318	200	660	505	55	300	400	93,6	225,0
HK 225S4 B35 4-6 IE3	1480	1780	37,00	42,50	66,70	0,86	356	225	680	560	60	350	450	93,9	285,0
HK 225M4 B35 4-6 IE3	1480	1780	45,00	52,00	80,90	0,86	356	225	705	560	60	350	450	94,2	315,0
HK 250M4 B35 4-6 IE3	1480	1780	55,00	63,00	98,40	0,86	406	250	770	620	60	450	550	94,6	395,0

P 50 Hz = nominal output at 400 V/50 Hz – P 60 Hz = nominal output at 400 V/60 Hz – n 50 Hz = nominal speed at 400 V/50 Hz – n 60 Hz = nominal speed at 400 V/60 Hz – I 50 Hz = nominal current at 400 V/50 Hz – LF 50 Hz = cos phi power factor at 50 Hz – η (IE3) = efficiency to IE3 in % (at full load)

Additional elements

HK MPK	Selection chart for motor/pump combination for gear pumps

Despite careful checking, we cannot guarantee the accuracy of all information included on this site, and we accept no liability.