K-HAND-SCHIEBEVENTIL

Manual slide valves

HANSA-FLEX

Properties

Operating pressure	Max. 10 bar
Operating temperature	max. +70 °C



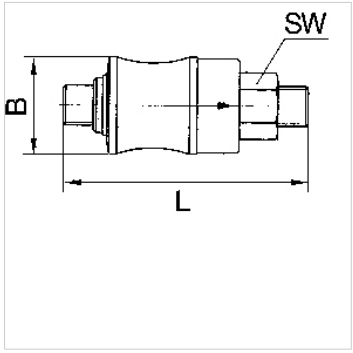

Note

Further information on request

Description

For use on devices that have to be vented whenever they are turned off, either because of safety regulations or for technical reasons. The pneumatic devices are disconnected from the system and simultaneously vented each time they are shut off.

Item

Identification	Thread	B (mm)	L (mm)	AF (mm)
K- 07 30 15 92	G 1/8	21,0	67,0	14
K- 07 30 15 93	G 1/4	24,0	77,0	17
K- 07 30 15 94	G 3/8	31,0	87,0	22
K- 07 30 15 95	G 1/2	35,0	104,0	26

Despite careful checking, we cannot guarantee the accuracy of all information included on this site, and we accept no liability.