K-BKR EINTEILIG VA

Ball valves

HANSA-FLEX

Properties

Operating pressure	max. 55 bar (depending on connection size and temperature)
Operating temperature	Max. 150 °C
Seal	PTFE
Hand lever	Stainless steel 1.4301

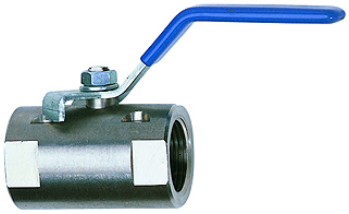

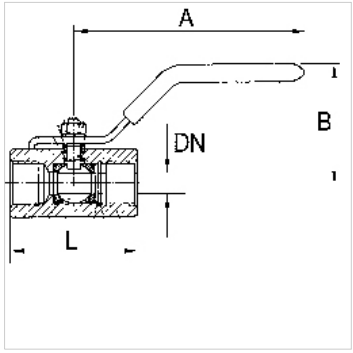

Note

G thread acc. to DIN EN ISO 228-1, with ISO flange plate (acc. to ISO 5211)
Further information on request

Description

Full bore with G 1/4 to G 3/8, reduced bore with G 1/2 to G 2

Ordering information

For use on devices that have to be vented whenever they are turned off, either because of safety regulations or for technical reasons. The pneumatic devices are disconnected from the system and simultaneously vented each time they are shut off.

Item

Identification	DN	Thread	A (mm)	B (mm)	L (mm)	Material
K- 07 30 14 94	5	G 1/4	60,0	30,0	39,8	Stainless steel 1.4401/1.4408
K- 07 30 14 95	7	G 3/8	80,0	33,0	44,8	Stainless steel 1.4401/1.4408
K- 07 30 14 96	9	G 1/2	110,0	57,0	56,5	Stainless steel 1.4401/1.4408
K- 07 30 14 97	13	G 3/4	110,0	61,0	60,0	Stainless steel 1.4401/1.4408
K- 07 30 14 98	15	G 1	124,0	70,0	70,0	Stainless steel 1.4401/1.4408
K- 07 30 14 99	20	G 1 1/4	152,0	75,0	77,6	Stainless steel 1.4401/1.4408
K- 07 30 15 00	25	G 1 1/2	150,0	80,0	87,0	Stainless steel 1.4401/1.4408
K- 07 30 15 01	32	G 2	155,0	85,0	102,0	Stainless steel 1.4401/1.4408

Despite careful checking, we cannot guarantee the accuracy of all information included on this site, and we accept no liability.