K-ABBLV VA 2

Stainless steel blow off safety valves, G 1/4

Properties

Operating pressure	0.5 - 60 bar
Operating temperature	max. 180 °C
Seals	FKM
Spring	Stainless steel 1.4310
Housing	Stainless steel 1.4305



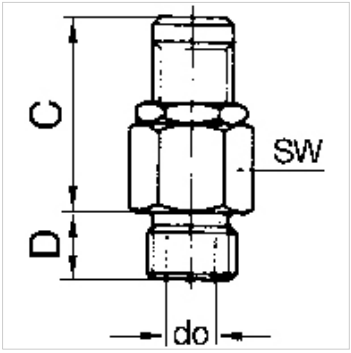

Note

G thread acc. to DIN EN ISO 228-1, with ISO flange plate (acc. to ISO 5211)
Further information on request

Description

Manual adjustment of the blow-off pressure (lock nut).

Ordering information

For use on devices that have to be vented whenever they are turned off, either because of safety regulations or for technical reasons. The pneumatic devices are disconnected from the system and simultaneously vented each time they are shut off.

Additional information

These blow-off valves can also be supplied with a fixed setting and a TÜV type test number. Please ask for an offer.

Item

Identification	Thread	Opening pressure	Blow-off capacity	C (mm)	D (mm)	Do (mm)	AF (mm)
K- 07 30 21 82	G 1/4	0.5 - 1.0 bar	to 50 l/min	27,0	7,0	3,0	16
K- 07 30 21 83	G 1/4	1.0 - 4.0 bar	to 200 l/min	27,0	7,0	3,0	16
K- 07 30 21 84	G 1/4	3.0 - 7.0 bar	to 350 l/min	27,0	7,0	3,0	16
K- 07 30 21 85	G 1/4	6.0 - 12.0 bar	to 650 l/min	27,0	7,0	3,0	16
K- 07 30 21 86	G 1/4	10.0 - 18.0 bar	to 870 l/min	27,0	7,0	3,0	16
K- 07 30 21 87	G 1/4	16.0 - 32.0 bar	to 1600 l/min	27,0	7,0	3,0	16
K- 07 30 21 88	G 1/4	30.0 - 60.0 bar	to 3000 l/min	27,0	7,0	3,0	16

Despite careful checking, we cannot guarantee the accuracy of all information included on this site, and we accept no liability.