K-SHV DN10

Safety valves DN 10

HANSA-FLEX

Properties

Operating pressure	see operating pressure
Operating temperature	-25 °C to +180 °C
Seals	FKM
Compression spring	Stainless steel
Housing	Brass
More information	User manual on request



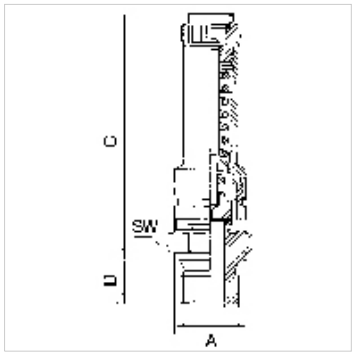

Note

G thread acc. to DIN EN ISO 228-1, with ISO flange plate (acc. to ISO 5211)

Description

For compressed air and non-toxic, non-flammable gases, cannot be used for liquids due to free blow-off, not suitable for steam. These valves are TÜV approved and have a TÜV type test number.

Additional information

Important information: These valves are type-tested and are only allowed to be delivered with a fixed setting.

Item

Identification	Thread	Opening pressure	A (mm)	C (mm)	D (mm)	AF (mm)
K- 07 30 03 60	G 3/8”	0.2 bar	22,0	75,0	12,0	27
K- 07 30 03 61	G 3/8”	0.25 bar	22,0	75,0	12,0	27
K- 07 30 03 62	G 3/8”	0.3 bar	22,0	75,0	12,0	27
K- 07 30 03 63	G 3/8”	0.4 bar	22,0	75,0	12,0	27
K- 07 30 03 64	G 3/8”	0.5 bar	22,0	75,0	12,0	27
K- 07 30 03 65	G 3/8”	0.6 bar	22,0	75,0	12,0	27
K- 07 30 03 66	G 3/8”	0.7 bar	22,0	75,0	12,0	27
K- 07 30 03 67	G 3/8”	0.8 bar	22,0	75,0	12,0	27
K- 07 30 03 68	G 3/8”	1.0 bar	22,0	75,0	12,0	27
K- 07 30 03 69	G 3/8”	1.1 bar	22,0	75,0	12,0	27
K- 07 30 03 70	G 3/8”	1.2 bar	22,0	75,0	12,0	27
K- 07 30 03 71	G 3/8”	1.3 bar	22,0	75,0	12,0	27
K- 07 30 03 72	G 3/8”	1.5 bar	22,0	75,0	12,0	27
K- 07 30 03 73	G 3/8”	1.7 bar	22,0	75,0	12,0	27
K- 07 30 03 74	G 3/8”	1.8 bar	22,0	75,0	12,0	27
K- 07 30 03 97	G 3/8”	2.0 bar	22,0	75,0	12,0	27
K- 07 30 03 98	G 3/8”	2.1 bar	22,0	75,0	12,0	27
K- 07 30 03 99	G 3/8”	2.3 bar	22,0	75,0	12,0	27
K- 07 30 04 00	G 3/8”	2.5 bar	22,0	75,0	12,0	27
K- 07 30 04 01	G 3/8”	2.6 bar	22,0	75,0	12,0	27
K- 07 30 04 02	G 3/8”	2.8 bar	22,0	75,0	12,0	27
K- 07 30 04 19	G 3/8”	3.0 bar	22,0	75,0	12,0	27
K- 07 30 04 20	G 3/8”	3.2 bar	22,0	75,0	12,0	27
K- 07 30 04 21	G 3/8”	3.3 bar	22,0	75,0	12,0	27
K- 07 30 04 22	G 3/8”	3.4 bar	22,0	75,0	12,0	27
K- 07 30 04 23	G 3/8”	3.5 bar	22,0	75,0	12,0	27
K- 07 30 04 24	G 3/8”	3.6 bar	22,0	75,0	12,0	27
K- 07 30 04 25	G 3/8”	3.8 bar	22,0	75,0	12,0	27
K- 07 30 04 26	G 3/8”	3.9 bar	22,0	75,0	12,0	27
K- 07 30 04 38	G 3/8”	4.0 bar	22,0	75,0	12,0	27
K- 07 30 04 40	G 3/8”	4.2 bar	22,0	75,0	12,0	27
K- 07 30 04 41	G 3/8”	4.4 bar	22,0	75,0	12,0	27
K- 07 30 04 42	G 3/8”	4.5 bar	22,0	75,0	12,0	27
K- 07 30 04 43	G 3/8”	4.6 bar	22,0	75,0	12,0	27
K- 07 30 04 44	G 3/8”	4.7 bar	22,0	75,0	12,0	27
K- 07 30 04 45	G 3/8”	4.9 bar	22,0	75,0	12,0	27
K- 07 30 04 51	G 3/8”	5.0 bar	22,0	75,0	12,0	27

Despite careful checking, we cannot guarantee the accuracy of all information included on this site, and we accept no liability.

K-SHV DN10
Safety valves DN 10

HANSA-FLEX

Item						
Identification	Thread	Opening pressure	A (mm)	C (mm)	D (mm)	AF (mm)
K- 07 30 04 52	G 3/8”	5.5 bar	22,0	75,0	12,0	27
K- 07 30 04 53	G 3/8”	5.7 bar	22,0	75,0	12,0	27
K- 07 30 04 54	G 3/8”	5.8 bar	22,0	75,0	12,0	27
K- 07 30 04 56	G 3/8”	6.0 bar	22,0	75,0	12,0	27
K- 07 30 04 57	G 3/8”	6.2 bar	22,0	75,0	12,0	27
K- 07 30 04 58	G 3/8”	6.4 bar	22,0	75,0	12,0	27
K- 07 30 04 59	G 3/8”	6.5 bar	22,0	75,0	12,0	27
K- 07 30 04 60	G 3/8”	6.6 bar	22,0	75,0	12,0	27
K- 07 30 04 61	G 3/8”	7.0 bar	22,0	75,0	12,0	27
K- 07 30 04 62	G 3/8”	7.5 bar	22,0	75,0	12,0	27
K- 07 30 04 63	G 3/8”	7.7 bar	22,0	75,0	12,0	27
K- 07 30 04 64	G 3/8”	7.8 bar	22,0	75,0	12,0	27
K- 07 30 04 65	G 3/8”	8.0 bar	22,0	75,0	12,0	27
K- 07 30 04 66	G 3/8”	8.1 bar	22,0	75,0	12,0	27
K- 07 30 04 67	G 3/8”	8.4 bar	22,0	75,0	12,0	27
K- 07 30 04 68	G 3/8”	8.5 bar	22,0	75,0	12,0	27
K- 07 30 04 69	G 3/8”	8.7 bar	22,0	95,0	12,0	27
K- 07 30 04 70	G 3/8”	8.8 bar	22,0	95,0	12,0	27
K- 07 30 04 71	G 3/8”	9.0 bar	22,0	95,0	12,0	27
K- 07 30 04 72	G 3/8”	9.1 bar	22,0	95,0	12,0	27
K- 07 30 04 73	G 3/8”	9.3 bar	22,0	95,0	12,0	27
K- 07 30 04 74	G 3/8”	9.5 bar	22,0	95,0	12,0	27
K- 07 30 04 75	G 3/8”	9.8 bar	22,0	95,0	12,0	27
K- 07 30 04 76	G 3/8”	9.9 bar	22,0	95,0	12,0	27
K- 07 30 03 75	G 3/8”	10.0 bar	22,0	95,0	12,0	27
K- 07 30 03 76	G 3/8”	10.3 bar	22,0	95,0	12,0	27
K- 07 30 03 77	G 3/8”	10.4 bar	22,0	95,0	12,0	27
K- 07 30 03 78	G 3/8”	10.5 bar	22,0	95,0	12,0	27
K- 07 30 03 79	G 3/8”	10.8 bar	22,0	95,0	12,0	27
K- 07 30 03 80	G 3/8”	11.0 bar	22,0	95,0	12,0	27
K- 07 30 03 81	G 3/8”	11.3 bar	22,0	95,0	12,0	27
K- 07 30 03 82	G 3/8”	11.5 bar	22,0	95,0	12,0	27
K- 07 30 03 83	G 3/8”	12.0 bar	22,0	95,0	12,0	27
K- 07 30 03 84	G 3/8”	12.5 bar	22,0	95,0	12,0	27
K- 07 30 03 86	G 3/8”	13.5 bar	22,0	95,0	12,0	27
K- 07 30 03 85	G 3/8”	13.0 bar	22,0	95,0	12,0	27
K- 07 30 03 87	G 3/8”	14.0 bar	22,0	95,0	12,0	27
K- 07 30 03 88	G 3/8”	15.0 bar	22,0	95,0	12,0	27
K- 07 30 03 89	G 3/8”	15.5 bar	22,0	95,0	12,0	27
K- 07 30 03 90	G 3/8”	15.8 bar	22,0	95,0	12,0	27
K- 07 30 03 91	G 3/8”	16.0 bar	22,0	95,0	12,0	27
K- 07 30 03 92	G 3/8”	16.5 bar	22,0	95,0	12,0	27
K- 07 30 03 93	G 3/8”	17.0 bar	22,0	95,0	12,0	27
K- 07 30 03 94	G 3/8”	17.5 bar	22,0	95,0	12,0	27
K- 07 30 03 95	G 3/8”	18.0 bar	22,0	95,0	12,0	27
K- 07 30 03 96	G 3/8”	19.0 bar	22,0	95,0	12,0	27
K- 07 30 04 03	G 3/8”	20.0 bar	22,0	95,0	12,0	27
K- 07 30 04 04	G 3/8”	20.5 bar	22,0	95,0	12,0	27
K- 07 30 04 05	G 3/8”	21.0 bar	22,0	95,0	12,0	27
K- 07 30 04 06	G 3/8”	21.5 bar	22,0	95,0	12,0	27
K- 07 30 04 07	G 3/8”	22.0 bar	22,0	95,0	12,0	27
K- 07 30 04 08	G 3/8”	22.5 bar	22,0	95,0	12,0	27
K- 07 30 04 09	G 3/8”	23.5 bar	22,0	95,0	12,0	27
K- 07 30 04 10	G 3/8”	24.5 bar	22,0	95,0	12,0	27
K- 07 30 04 11	G 3/8”	25.0 bar	22,0	95,0	12,0	27
K- 07 30 04 12	G 3/8”	25.5 bar	22,0	95,0	12,0	27
K- 07 30 04 13	G 3/8”	26.0 bar	22,0	95,0	12,0	27
K- 07 30 04 14	G 3/8”	26.6 bar	22,0	95,0	12,0	27
K- 07 30 04 15	G 3/8”	27.0 bar	22,0	95,0	12,0	27
K- 07 30 04 16	G 3/8”	27.5 bar	22,0	95,0	12,0	27
K- 07 30 04 17	G 3/8”	28.0 bar	22,0	95,0	12,0	27
K- 07 30 04 18	G 3/8”	28.5 bar	22,0	95,0	12,0	27
K- 07 30 04 27	G 3/8”	30.0 bar	22,0	95,0	12,0	27

Despite careful checking, we cannot guarantee the accuracy of all information included on this site, and we accept no liability.

Item						
Identification	Thread	Opening pressure	A (mm)	C (mm)	D (mm)	AF (mm)
K- 07 30 04 28	G 3/8”	30.5 bar	22,0	95,0	12,0	27
K- 07 30 04 29	G 3/8”	31.0 bar	22,0	95,0	12,0	27
K- 07 30 04 30	G 3/8”	32.0 bar	22,0	95,0	12,0	27
K- 07 30 04 31	G 3/8”	32.5 bar	22,0	95,0	12,0	27
K- 07 30 04 32	G 3/8”	35.0 bar	22,0	95,0	12,0	27
K- 07 30 04 33	G 3/8”	35.5 bar	22,0	95,0	12,0	27
K- 07 30 04 34	G 3/8”	36.0 bar	22,0	95,0	12,0	27
K- 07 30 04 35	G 3/8”	36.5 bar	22,0	95,0	12,0	27
K- 07 30 04 36	G 3/8”	37.0 bar	22,0	95,0	12,0	27
K- 07 30 04 37	G 3/8”	38.0 bar	22,0	95,0	12,0	27
K- 07 30 04 46	G 3/8”	40.0 bar	22,0	95,0	12,0	27
K- 07 30 04 47	G 3/8”	41.0 bar	22,0	120,0	12,0	27
K- 07 30 04 48	G 3/8”	42.0 bar	22,0	120,0	12,0	27
K- 07 30 04 49	G 3/8”	45.0 bar	22,0	120,0	12,0	27
K- 07 30 04 50	G 3/8”	46.0 bar	22,0	120,0	12,0	27
K- 07 30 04 55	G 3/8”	50.0 bar	22,0	120,0	12,0	27
K- 07 30 04 77	G 1/2”	0.2 bar	26,0	75,0	14,0	27
K- 07 30 04 78	G 1/2”	0.3 bar	26,0	75,0	14,0	27
K- 07 30 04 79	G 1/2”	0.35 bar	26,0	75,0	14,0	27
K- 07 30 04 80	G 1/2”	0.4 bar	26,0	75,0	14,0	27
K- 07 30 04 81	G 1/2”	0.45 bar	26,0	75,0	14,0	27
K- 07 30 04 82	G 1/2”	0.5 bar	26,0	75,0	14,0	27
K- 07 30 04 83	G 1/2”	0.55 bar	26,0	75,0	14,0	27
K- 07 30 04 84	G 1/2”	0.6 bar	26,0	75,0	14,0	27
K- 07 30 04 85	G 1/2”	0.7 bar	26,0	75,0	14,0	27
K- 07 30 04 86	G 1/2”	0.8 bar	26,0	75,0	14,0	27
K- 07 30 04 87	G 1/2”	0.9 bar	26,0	75,0	14,0	27
K- 07 30 04 88	G 1/2”	1.0 bar	26,0	75,0	14,0	27
K- 07 30 04 89	G 1/2”	1.1 bar	26,0	75,0	14,0	27
K- 07 30 04 90	G 1/2”	1.2 bar	26,0	75,0	14,0	27
K- 07 30 04 91	G 1/2”	1.3 bar	26,0	75,0	14,0	27
K- 07 30 04 92	G 1/2”	1.4 bar	26,0	75,0	14,0	27
K- 07 30 04 93	G 1/2”	1.5 bar	26,0	75,0	14,0	27
K- 07 30 04 94	G 1/2”	1.6 bar	26,0	75,0	14,0	27
K- 07 30 04 95	G 1/2”	1.7 bar	26,0	75,0	14,0	27
K- 07 30 04 96	G 1/2”	1.8 bar	26,0	75,0	14,0	27
K- 07 30 05 28	G 1/2”	2.0 bar	26,0	75,0	14,0	27
K- 07 30 05 29	G 1/2”	2.1 bar	26,0	75,0	14,0	27
K- 07 30 05 30	G 1/2”	2.2 bar	26,0	75,0	14,0	27
K- 07 30 05 31	G 1/2”	2.3 bar	26,0	75,0	14,0	27
K- 07 30 05 32	G 1/2”	2.4 bar	26,0	75,0	14,0	27
K- 07 30 05 33	G 1/2”	2.5 bar	26,0	75,0	14,0	27
K- 07 30 05 34	G 1/2”	2.7 bar	26,0	75,0	14,0	27
K- 07 30 05 35	G 1/2”	2.8 bar	26,0	75,0	14,0	27
K- 07 30 05 58	G 1/2”	3.0 bar	26,0	75,0	14,0	27
K- 07 30 05 59	G 1/2”	3.1 bar	26,0	75,0	14,0	27
K- 07 30 05 60	G 1/2”	3.2 bar	26,0	75,0	14,0	27
K- 07 30 05 61	G 1/2”	3.3 bar	26,0	75,0	14,0	27
K- 07 30 05 62	G 1/2”	3.4 bar	26,0	75,0	14,0	27
K- 07 30 05 63	G 1/2”	3.5 bar	26,0	75,0	14,0	27
K- 07 30 05 64	G 1/2”	3.8 bar	26,0	75,0	14,0	27
K- 07 30 05 82	G 1/2”	4.0 bar	26,0	75,0	14,0	27
K- 07 30 05 83	G 1/2”	4.1 bar	26,0	75,0	14,0	27
K- 07 30 05 84	G 1/2”	4.2 bar	26,0	75,0	14,0	27
K- 07 30 05 85	G 1/2”	4.5 bar	26,0	75,0	14,0	27
K- 07 30 05 86	G 1/2”	4.7 bar	26,0	75,0	14,0	27
K- 07 30 05 87	G 1/2”	4.8 bar	26,0	75,0	14,0	27
K- 07 30 05 98	G 1/2”	5.0 bar	26,0	75,0	14,0	27
K- 07 30 05 99	G 1/2”	5.1 bar	26,0	75,0	14,0	27
K- 07 30 06 00	G 1/2”	5.2 bar	26,0	75,0	14,0	27
K- 07 30 06 01	G 1/2”	5.3 bar	26,0	75,0	14,0	27
K- 07 30 06 02	G 1/2”	5.4 bar	26,0	75,0	14,0	27
K- 07 30 06 03	G 1/2”	5.5 bar	26,0	75,0	14,0	27

Despite careful checking, we cannot guarantee the accuracy of all information included on this site, and we accept no liability.

Item						
Identification	Thread	Opening pressure	A (mm)	C (mm)	D (mm)	AF (mm)
K- 07 30 06 04	G 1/2”	5.6 bar	26,0	75,0	14,0	27
K- 07 30 06 05	G 1/2”	5.8 bar	26,0	75,0	14,0	27
K- 07 30 06 07	G 1/2”	6.0 bar	26,0	75,0	14,0	27
K- 07 30 06 08	G 1/2”	6.2 bar	26,0	75,0	14,0	27
K- 07 30 06 09	G 1/2”	6.3 bar	26,0	75,0	14,0	27
K- 07 30 06 10	G 1/2”	6.4 bar	26,0	75,0	14,0	27
K- 07 30 06 11	G 1/2”	6.5 bar	26,0	75,0	14,0	27
K- 07 30 06 12	G 1/2”	6.6 bar	26,0	75,0	14,0	27
K- 07 30 06 13	G 1/2”	6.8 bar	26,0	75,0	14,0	27
K- 07 30 06 14	G 1/2”	6.9 bar	26,0	75,0	14,0	27
K- 07 30 06 15	G 1/2”	7.0 bar	26,0	75,0	14,0	27
K- 07 30 06 16	G 1/2”	7.2 bar	26,0	75,0	14,0	27
K- 07 30 06 17	G 1/2”	7.5 bar	26,0	75,0	14,0	27
K- 07 30 06 18	G 1/2”	7.7 bar	26,0	75,0	14,0	27
K- 07 30 06 19	G 1/2”	8.0 bar	26,0	75,0	14,0	27
K- 07 30 06 20	G 1/2”	8.2 bar	26,0	75,0	14,0	27
K- 07 30 06 21	G 1/2”	8.5 bar	26,0	75,0	14,0	27
K- 07 30 06 22	G 1/2”	8.6 bar	26,0	95,0	14,0	27
K- 07 30 06 23	G 1/2”	8.8 bar	26,0	95,0	14,0	27
K- 07 30 06 24	G 1/2”	9.0 bar	26,0	95,0	14,0	27
K- 07 30 06 25	G 1/2”	9.1 bar	26,0	95,0	14,0	27
K- 07 30 06 26	G 1/2”	9.3 bar	26,0	95,0	14,0	27
K- 07 30 06 27	G 1/2”	9.5 bar	26,0	95,0	14,0	27
K- 07 30 06 28	G 1/2”	9.6 bar	26,0	95,0	14,0	27
K- 07 30 06 29	G 1/2”	9.8 bar	26,0	95,0	14,0	27
K- 07 30 04 97	G 1/2”	10.0 bar	26,0	95,0	14,0	27
K- 07 30 04 98	G 1/2”	10.3 bar	26,0	95,0	14,0	27
K- 07 30 04 99	G 1/2”	10.5 bar	26,0	95,0	14,0	27
K- 07 30 05 01	G 1/2”	11.0 bar	26,0	95,0	14,0	27
K- 07 30 05 02	G 1/2”	11.5 bar	26,0	95,0	14,0	27
K- 07 30 05 03	G 1/2”	11.6 bar	26,0	95,0	14,0	27
K- 07 30 05 04	G 1/2”	12.0 bar	26,0	95,0	14,0	27
K- 07 30 05 05	G 1/2”	12.1 bar	26,0	95,0	14,0	27
K- 07 30 05 06	G 1/2”	12.5 bar	26,0	95,0	14,0	27
K- 07 30 05 07	G 1/2”	13.0 bar	26,0	95,0	14,0	27
K- 07 30 05 08	G 1/2”	13.3 bar	26,0	95,0	14,0	27
K- 07 30 05 09	G 1/2”	13.5 bar	26,0	95,0	14,0	27
K- 07 30 05 10	G 1/2”	14.0 bar	26,0	95,0	14,0	27
K- 07 30 05 11	G 1/2”	14.5 bar	26,0	95,0	14,0	27
K- 07 30 05 12	G 1/2”	15.0 bar	26,0	95,0	14,0	27
K- 07 30 05 13	G 1/2”	15.1 bar	26,0	95,0	14,0	27
K- 07 30 05 14	G 1/2”	15.5 bar	26,0	95,0	14,0	27
K- 07 30 05 15	G 1/2”	15.6 bar	26,0	95,0	14,0	27
K- 07 30 05 16	G 1/2”	15.8 bar	26,0	95,0	14,0	27
K- 07 30 05 17	G 1/2”	16.0 bar	26,0	95,0	14,0	27
K- 07 30 05 18	G 1/2”	16.5 bar	26,0	95,0	14,0	27
K- 07 30 05 19	G 1/2”	17.0 bar	26,0	95,0	14,0	27
K- 07 30 05 20	G 1/2”	17.5 bar	26,0	95,0	14,0	27
K- 07 30 05 21	G 1/2”	17.6 bar	26,0	95,0	14,0	27
K- 07 30 05 22	G 1/2”	18.0 bar	26,0	95,0	14,0	27
K- 07 30 05 23	G 1/2”	18.9 bar	26,0	95,0	14,0	27
K- 07 30 05 24	G 1/2”	19.0 bar	26,0	95,0	14,0	27
K- 07 30 05 25	G 1/2”	19.1 bar	26,0	95,0	14,0	27
K- 07 30 05 26	G 1/2”	19.4 bar	26,0	95,0	14,0	27
K- 07 30 05 27	G 1/2”	19.5 bar	26,0	95,0	14,0	27
K- 07 30 05 36	G 1/2”	20.0 bar	26,0	95,0	14,0	27
K- 07 30 05 37	G 1/2”	20.5 bar	26,0	95,0	14,0	27
K- 07 30 05 38	G 1/2”	20.8 bar	26,0	95,0	14,0	27
K- 07 30 05 39	G 1/2”	21.0 bar	26,0	95,0	14,0	27
K- 07 30 05 40	G 1/2”	22.0 bar	26,0	95,0	14,0	27
K- 07 30 05 41	G 1/2”	22.5 bar	26,0	95,0	14,0	27
K- 07 30 05 42	G 1/2”	23.0 bar	26,0	95,0	14,0	27
K- 07 30 05 43	G 1/2”	23.5 bar	26,0	95,0	14,0	27

Despite careful checking, we cannot guarantee the accuracy of all information included on this site, and we accept no liability.

Item						
Identification	Thread	Opening pressure	A (mm)	C (mm)	D (mm)	AF (mm)
K- 07 30 05 44	G 1/2”	24.0 bar	26,0	95,0	14,0	27
K- 07 30 05 45	G 1/2”	24.5 bar	26,0	95,0	14,0	27
K- 07 30 05 46	G 1/2”	25.0 bar	26,0	95,0	14,0	27
K- 07 30 05 47	G 1/2”	25.2 bar	26,0	95,0	14,0	27
K- 07 30 05 48	G 1/2”	26.0 bar	26,0	95,0	14,0	27
K- 07 30 05 49	G 1/2”	26.5 bar	26,0	95,0	14,0	27
K- 07 30 05 50	G 1/2”	27.0 bar	26,0	95,0	14,0	27
K- 07 30 05 51	G 1/2”	27.2 bar	26,0	95,0	14,0	27
K- 07 30 05 52	G 1/2”	27.5 bar	26,0	95,0	14,0	27
K- 07 30 05 53	G 1/2”	28.0 bar	26,0	95,0	14,0	27
K- 07 30 05 54	G 1/2”	28.5 bar	26,0	95,0	14,0	27
K- 07 30 05 55	G 1/2”	28.6 bar	26,0	95,0	14,0	27
K- 07 30 05 56	G 1/2”	29.0 bar	26,0	95,0	14,0	27
K- 07 30 05 57	G 1/2”	29.5 bar	26,0	95,0	14,0	27
K- 07 30 05 65	G 1/2”	30.0 bar	26,0	95,0	14,0	27
K- 07 30 05 66	G 1/2”	30.8 bar	26,0	95,0	14,0	27
K- 07 30 05 67	G 1/2”	31.0 bar	26,0	95,0	14,0	27
K- 07 30 05 68	G 1/2”	31.5 bar	26,0	95,0	14,0	27
K- 07 30 05 69	G 1/2”	32.0 bar	26,0	95,0	14,0	27
K- 07 30 05 70	G 1/2”	32.5 bar	26,0	95,0	14,0	27
K- 07 30 05 71	G 1/2”	33.0 bar	26,0	95,0	14,0	27
K- 07 30 05 72	G 1/2”	33.3 bar	26,0	95,0	14,0	27
K- 07 30 05 73	G 1/2”	33.7 bar	26,0	95,0	14,0	27
K- 07 30 05 74	G 1/2”	34.0 bar	26,0	95,0	14,0	27
K- 07 30 05 75	G 1/2”	34.1 bar	26,0	95,0	14,0	27
K- 07 30 05 76	G 1/2”	35.0 bar	26,0	95,0	14,0	27
K- 07 30 05 77	G 1/2”	36.0 bar	26,0	95,0	14,0	27
K- 07 30 05 78	G 1/2”	36.3 bar	26,0	95,0	14,0	27
K- 07 30 05 79	G 1/2”	36.4 bar	26,0	95,0	14,0	27
K- 07 30 05 80	G 1/2”	36.8 bar	26,0	95,0	14,0	27
K- 07 30 05 81	G 1/2”	38.0 bar	26,0	95,0	14,0	27
K- 07 30 05 88	G 1/2”	40.0 bar	26,0	95,0	14,0	27
K- 07 30 05 89	G 1/2”	41.0 bar	26,0	120,0	14,0	27
K- 07 30 05 90	G 1/2”	41.5 bar	26,0	120,0	14,0	27
K- 07 30 05 91	G 1/2”	42.0 bar	26,0	120,0	14,0	27
K- 07 30 05 92	G 1/2”	43.0 bar	26,0	120,0	14,0	27
K- 07 30 05 93	G 1/2”	44.0 bar	26,0	120,0	14,0	27
K- 07 30 05 94	G 1/2”	45.0 bar	26,0	120,0	14,0	27
K- 07 30 05 95	G 1/2”	46.0 bar	26,0	120,0	14,0	27
K- 07 30 05 96	G 1/2”	47.0 bar	26,0	120,0	14,0	27
K- 07 30 05 97	G 1/2”	48.0 bar	26,0	120,0	14,0	27
K- 07 30 06 06	G 1/2”	50.0 bar	26,0	120,0	14,0	27
K- 07 30 06 30	G 3/4”	0.2 bar	32,0	75,0	16,0	32
K- 07 30 06 31	G 3/4”	0.3 bar	32,0	75,0	16,0	32
K- 07 30 06 32	G 3/4”	0.35 bar	32,0	75,0	16,0	32
K- 07 30 06 33	G 3/4”	0.4 bar	32,0	75,0	16,0	32
K- 07 30 06 34	G 3/4”	0.5 bar	32,0	75,0	16,0	32
K- 07 30 06 35	G 3/4”	0.65 bar	32,0	75,0	16,0	32
K- 07 30 06 36	G 3/4”	0.7 bar	32,0	75,0	16,0	32
K- 07 30 06 37	G 3/4”	0.8 bar	32,0	75,0	16,0	32
K- 07 30 06 38	G 3/4”	0.9 bar	32,0	75,0	16,0	32
K- 07 30 06 39	G 3/4”	1.0 bar	32,0	75,0	16,0	32
K- 07 30 06 40	G 3/4”	1.1 bar	32,0	75,0	16,0	32
K- 07 30 06 41	G 3/4”	1.2 bar	32,0	75,0	16,0	32
K- 07 30 06 42	G 3/4”	1.4 bar	32,0	75,0	16,0	32
K- 07 30 06 43	G 3/4”	1.5 bar	32,0	75,0	16,0	32
K- 07 30 06 44	G 3/4”	1.6 bar	32,0	75,0	16,0	32
K- 07 30 06 45	G 3/4”	1.75 bar	32,0	75,0	16,0	32
K- 07 30 06 46	G 3/4”	1.8 bar	32,0	75,0	16,0	32
K- 07 30 06 47	G 3/4”	1.9 bar	32,0	75,0	16,0	32
K- 07 30 06 72	G 3/4”	2.0 bar	32,0	75,0	16,0	32
K- 07 30 06 73	G 3/4”	2.1 bar	32,0	75,0	16,0	32
K- 07 30 06 74	G 3/4”	2.2 bar	32,0	75,0	16,0	32

Despite careful checking, we cannot guarantee the accuracy of all information included on this site, and we accept no liability.

Item						
Identification	Thread	Opening pressure	A (mm)	C (mm)	D (mm)	AF (mm)
K- 07 30 06 75	G 3/4”	2.3 bar	32,0	75,0	16,0	32
K- 07 30 06 76	G 3/4”	2.4 bar	32,0	75,0	16,0	32
K- 07 30 06 77	G 3/4”	2.5 bar	32,0	75,0	16,0	32
K- 07 30 06 78	G 3/4”	2.7 bar	32,0	75,0	16,0	32
K- 07 30 06 97	G 3/4”	3.0 bar	32,0	75,0	16,0	32
K- 07 30 06 98	G 3/4”	3.2 bar	32,0	75,0	16,0	32
K- 07 30 06 99	G 3/4”	3.3 bar	32,0	75,0	16,0	32
K- 07 30 07 00	G 3/4”	3.5 bar	32,0	75,0	16,0	32
K- 07 30 07 01	G 3/4”	3.6 bar	32,0	75,0	16,0	32
K- 07 30 07 02	G 3/4”	3.8 bar	32,0	75,0	16,0	32
K- 07 30 07 14	G 3/4”	4.0 bar	32,0	75,0	16,0	32
K- 07 30 07 15	G 3/4”	4.1 bar	32,0	75,0	16,0	32
K- 07 30 07 16	G 3/4”	4.5 bar	32,0	75,0	16,0	32
K- 07 30 07 17	G 3/4”	4.7 bar	32,0	75,0	16,0	32
K- 07 30 07 18	G 3/4”	4.9 bar	32,0	75,0	16,0	32
K- 07 30 07 26	G 3/4”	5.0 bar	32,0	75,0	16,0	32
K- 07 30 07 27	G 3/4”	5.1 bar	32,0	75,0	16,0	32
K- 07 30 07 28	G 3/4”	5.3 bar	32,0	75,0	16,0	32
K- 07 30 07 29	G 3/4”	5.5 bar	32,0	75,0	16,0	32
K- 07 30 07 30	G 3/4”	5.7 bar	32,0	75,0	16,0	32
K- 07 30 07 32	G 3/4”	6.0 bar	32,0	75,0	16,0	32
K- 07 30 07 33	G 3/4”	6.2 bar	32,0	75,0	16,0	32
K- 07 30 07 34	G 3/4”	6.5 bar	32,0	75,0	16,0	32
K- 07 30 07 35	G 3/4”	6.6 bar	32,0	75,0	16,0	32
K- 07 30 07 36	G 3/4”	7.0 bar	32,0	75,0	16,0	32
K- 07 30 07 37	G 3/4”	7.1 bar	32,0	75,0	16,0	32
K- 07 30 07 38	G 3/4”	7.2 bar	32,0	75,0	16,0	32
K- 07 30 07 39	G 3/4”	7.5 bar	32,0	75,0	16,0	32
K- 07 30 07 40	G 3/4”	7.7 bar	32,0	75,0	16,0	32
K- 07 30 07 41	G 3/4”	7.8 bar	32,0	75,0	16,0	32
K- 07 30 07 42	G 3/4”	8.0 bar	32,0	75,0	16,0	32
K- 07 30 07 43	G 3/4”	8.2 bar	32,0	75,0	16,0	32
K- 07 30 07 44	G 3/4”	8.4 bar	32,0	75,0	16,0	32
K- 07 30 07 45	G 3/4”	8.5 bar	32,0	75,0	16,0	32
K- 07 30 07 46	G 3/4”	8.6 bar	32,0	95,0	16,0	32
K- 07 30 07 47	G 3/4”	8.8 bar	32,0	95,0	16,0	32
K- 07 30 07 48	G 3/4”	9.0 bar	32,0	95,0	16,0	32
K- 07 30 07 49	G 3/4”	9.1 bar	32,0	95,0	16,0	32
K- 07 30 07 50	G 3/4”	9.3 bar	32,0	95,0	16,0	32
K- 07 30 07 51	G 3/4”	9.4 bar	32,0	95,0	16,0	32
K- 07 30 07 52	G 3/4”	9.5 bar	32,0	95,0	16,0	32
K- 07 30 07 53	G 3/4”	9.6 bar	32,0	95,0	16,0	32
K- 07 30 07 54	G 3/4”	9.8 bar	32,0	95,0	16,0	32
K- 07 30 07 55	G 3/4”	9.9 bar	32,0	95,0	16,0	32
K- 07 30 06 48	G 3/4”	10.0 bar	32,0	95,0	16,0	32
K- 07 30 06 49	G 3/4”	10.2 bar	32,0	95,0	16,0	32
K- 07 30 06 50	G 3/4”	10.5 bar	32,0	95,0	16,0	32
K- 07 30 06 51	G 3/4”	10.6 bar	32,0	95,0	16,0	32
K- 07 30 06 52	G 3/4”	11.0 bar	32,0	95,0	16,0	32
K- 07 30 06 53	G 3/4”	11.5 bar	32,0	95,0	16,0	32
K- 07 30 06 54	G 3/4”	11.6 bar	32,0	95,0	16,0	32
K- 07 30 06 55	G 3/4”	12.0 bar	32,0	95,0	16,0	32
K- 07 30 06 56	G 3/4”	12.5 bar	32,0	95,0	16,0	32
K- 07 30 06 57	G 3/4”	13.0 bar	32,0	95,0	16,0	32
K- 07 30 06 58	G 3/4”	13.5 bar	32,0	95,0	16,0	32
K- 07 30 06 59	G 3/4”	13.8 bar	32,0	95,0	16,0	32
K- 07 30 06 60	G 3/4”	14.0 bar	32,0	95,0	16,0	32
K- 07 30 06 61	G 3/4”	15.0 bar	32,0	95,0	16,0	32
K- 07 30 06 62	G 3/4”	15.2 bar	32,0	95,0	16,0	32
K- 07 30 06 63	G 3/4”	15.5 bar	32,0	95,0	16,0	32
K- 07 30 06 64	G 3/4”	16.0 bar	32,0	95,0	16,0	32
K- 07 30 06 65	G 3/4”	16.5 bar	32,0	95,0	16,0	32
K- 07 30 06 66	G 3/4”	17.0 bar	32,0	95,0	16,0	32

Despite careful checking, we cannot guarantee the accuracy of all information included on this site, and we accept no liability.

Item

Identification	Thread	Opening pressure	A (mm)	C (mm)	D (mm)	AF (mm)
K- 07 30 06 67	G 3/4”	17.5 bar	32,0	95,0	16,0	32
K- 07 30 06 68	G 3/4”	17.6 bar	32,0	95,0	16,0	32
K- 07 30 06 69	G 3/4”	18.0 bar	32,0	95,0	16,0	32
K- 07 30 06 70	G 3/4”	18.5 bar	32,0	95,0	16,0	32
K- 07 30 06 71	G 3/4”	19.0 bar	32,0	95,0	16,0	32
K- 07 30 06 79	G 3/4”	20.0 bar	32,0	95,0	16,0	32
K- 07 30 06 80	G 3/4”	20.5 bar	32,0	95,0	16,0	32
K- 07 30 06 81	G 3/4”	21.0 bar	32,0	95,0	16,0	32
K- 07 30 06 82	G 3/4”	21.5 bar	32,0	95,0	16,0	32
K- 07 30 06 83	G 3/4”	22.0 bar	32,0	95,0	16,0	32
K- 07 30 06 84	G 3/4”	23.2 bar	32,0	95,0	16,0	32
K- 07 30 06 85	G 3/4”	23.5 bar	32,0	95,0	16,0	32
K- 07 30 06 86	G 3/4”	24.0 bar	32,0	95,0	16,0	32
K- 07 30 06 87	G 3/4”	25.0 bar	32,0	95,0	16,0	32
K- 07 30 06 88	G 3/4”	25.5 bar	32,0	95,0	16,0	32
K- 07 30 06 89	G 3/4”	26.5 bar	32,0	95,0	16,0	32
K- 07 30 06 90	G 3/4”	27.0 bar	32,0	95,0	16,0	32
K- 07 30 06 91	G 3/4”	27.5 bar	32,0	95,0	16,0	32
K- 07 30 06 92	G 3/4”	27.6 bar	32,0	95,0	16,0	32
K- 07 30 06 93	G 3/4”	28.0 bar	32,0	95,0	16,0	32
K- 07 30 06 94	G 3/4”	28.5 bar	32,0	95,0	16,0	32
K- 07 30 06 95	G 3/4”	29.0 bar	32,0	95,0	16,0	32
K- 07 30 06 96	G 3/4”	29.5 bar	32,0	95,0	16,0	32
K- 07 30 07 03	G 3/4”	30.0 bar	32,0	95,0	16,0	32
K- 07 30 07 04	G 3/4”	31.5 bar	32,0	95,0	16,0	32
K- 07 30 07 05	G 3/4”	32.0 bar	32,0	95,0	16,0	32
K- 07 30 07 06	G 3/4”	32.5 bar	32,0	95,0	16,0	32
K- 07 30 07 07	G 3/4”	33.0 bar	32,0	95,0	16,0	32
K- 07 30 07 08	G 3/4”	33.5 bar	32,0	95,0	16,0	32
K- 07 30 07 09	G 3/4”	34.0 bar	32,0	95,0	16,0	32
K- 07 30 07 10	G 3/4”	35.0 bar	32,0	95,0	16,0	32
K- 07 30 07 11	G 3/4”	36.0 bar	32,0	95,0	16,0	32
K- 07 30 07 12	G 3/4”	37.0 bar	32,0	95,0	16,0	32
K- 07 30 07 13	G 3/4”	38.0 bar	32,0	95,0	16,0	32
K- 07 30 07 19	G 3/4”	40.0 bar	32,0	95,0	16,0	32
K- 07 30 07 20	G 3/4”	41.0 bar	32,0	120,0	16,0	32
K- 07 30 07 21	G 3/4”	42.0 bar	32,0	120,0	16,0	32
K- 07 30 07 22	G 3/4”	43.0 bar	32,0	120,0	16,0	32
K- 07 30 07 23	G 3/4”	44.0 bar	32,0	120,0	16,0	32
K- 07 30 07 24	G 3/4”	45.0 bar	32,0	120,0	16,0	32
K- 07 30 07 25	G 3/4”	46.0 bar	32,0	120,0	16,0	32
K- 07 30 07 31	G 3/4”	50.0 bar	32,0	120,0	16,0	32
K- 07 30 04 39	G 3/8”	4.1 bar	22,0	75,0	12,0	27
K- 07 30 05 00	G 1/2”	10.6 bar	26,0	95,0	14,0	27

Despite careful checking, we cannot guarantee the accuracy of all information included on this site, and we accept no liability.