K-HOCHLEIST SCHALLDAEMP

High-performance silencers

Properties

Operating temperature	-10 °C to +90 °C
Installation position	Any
Back pressure (Input)	Max. 6 bar
Material	Steel housing powder coated, perforated sheet galvanized steel, polyester felt discs

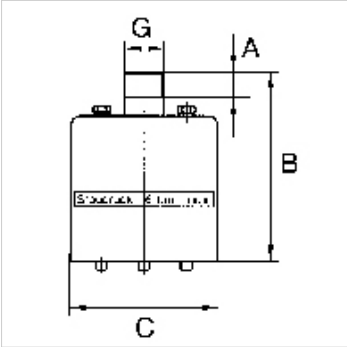

Note

Further information on request

Description

Multi-chamber silencers with a high blow-off rate, short exhaust time and excellent silencing effect.

Item

Identification	Flow rate 6bar	Thread	A (mm)	B (mm)	C (mm)
K- 07 40 14 31	13350 l/min	G 1/2	14,0	103,0	80,0
K- 07 40 14 32	16700 l/min	G 3/4	16,0	106,0	80,0
K- 07 40 14 33	23350 l/min	G 1	18,0	130,0	110,0
K- 07 40 14 34	31700 l/min	G 1 1/4	20,0	136,0	110,0
K- 07 40 14 35	53400 l/min	G 1 1/2	24,0	168,0	150,0
K- 07 40 14 36	56700 l/min	G 2	24,0	168,0	150,0

Despite careful checking, we cannot guarantee the accuracy of all information included on this site, and we accept no liability.