K-WV 3/2 ELK 230 VAC / 50HZ HANSA

3/2-way valves, electrically operated, with 230 VAC / 50 Hz solenoid

Properties

Input pressure	2 - 10 bar
Temp. range	-10 °C to +50 °C
Media	Compressed air
rush-in power alternating current 50Hz	2,2 VA
Duty cycle	ED 100 %
Electrical connection	Connector type C, ISO 15217, 2 poles + PE
holding power alternating current 50Hz	1,6 VA
Power consumption DC	2,5 W
Protection IP	IP 65
Connection thread	Material: Die-cast zinc
Housing	Material: Grivory® (PA 66)
Flow rate measurement	At P2 = 6 bar, pressure drop Δp = 1 bar



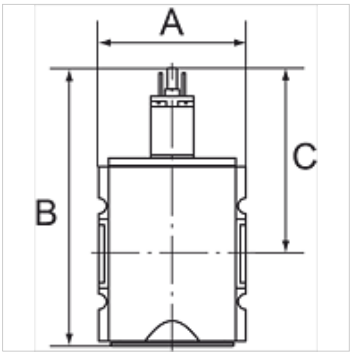

Note

Further information on request

Description

Pneumatic systems or parts of systems can be switched on and off by means of an electrical signal. When they are switched off, the system is exhausted at the same time.

Ordering information

Valves are also available with coil 110 V AC, 50 Hz and in a pneumatically operated version. Please ask for more information.

Item

Identification	Thread	Outlet	Flow rate (L/min)	A (mm)	B	C (mm)
K- 07 25 11 09	G 1/4	1/4	2000	52,0	117.8 mm	84,8
K- 07 25 11 10	G 3/8	1/4	2000	52,0	117.8 mm	84,8
K- 07 25 11 35	G 3/8	1/2	4500	63,0	150.3 mm	93,8
K- 07 25 11 36	G 1/2	1/2	4500	63,0	150.3 mm	93,8
K- 07 25 11 41	G 3/4	1/2	12500	85,0	177.7 mm	110,7
K- 07 25 11 42	G 1	1/2	12500	85,0	177.7 mm	110,7

Accessories

K-SCHALLDAE SINTERBR S	Silencers, sintered bronze, slotted
K-SCHALLDAE SINTERBR GE MS1	Silencers, sintered bronze, with brass hexagon nut and brass thread

Spare parts

K-HALTERBAUSATZ HANSA	Holder HANSA
K-VORSTEUERVENTIL HANSA	Replacement solenoid HANSA
K-GERAETESTECKER FORM C	Connector

Despite careful checking, we cannot guarantee the accuracy of all information included on this site, and we accept no liability.