K-PRAEZI DRG MANO HANSA

Precision pressure regulators

Properties

Input pressure	Max. 16 bar
Temp. range	-10 °C to +50 °C
Media	Compressed air
Connection thread	Material: Die-cast zinc
Housing	Material: Grivory® (PA 66)
Diaphragm	NBR
Internal air consumption	2.6 l/min at P2 = 6 bar (depending on secondary pressure)
Flow rate measurement	At P1 = 10 bar, P2 = 6.3 bar and pressure drop Δp = 1 bar



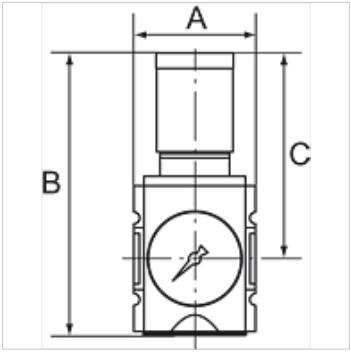

Note

Further information on request

Description

Precision diaphragm pressure regulators with self-relieving design and excellent flow rates in modern design for applications requiring an extremely accurate working pressure. The regulator button can be latched and locked.

Ordering information

The price does not include a key lock. Please order separately.

Item

Identification	Thread	Control range	Flow rate (L/min)	A (mm)	B	C (mm)	Size
K- 07 25 09 46	G 1/4	0.1 - 1 bar	2200	52,0	128.5 mm	95,5	1
K- 07 25 09 47	G 1/4	0.1 - 2 bar	2200	52,0	128.5 mm	95,5	1
K- 07 25 09 48	G 1/4	0.2 - 4 bar	2200	52,0	128.5 mm	95,5	1
K- 07 25 09 49	G 1/4	0.5 - 8 bar	2200	52,0	128.5 mm	95,5	1
K- 07 25 09 50	G 1/4	0.5 - 10 bar	2200	52,0	128.5 mm	95,5	1
K- 07 25 09 51	G 3/8	0.1 - 1 bar	2700	52,0	128.5 mm	95,5	1
K- 07 25 09 52	G 3/8	0.1 - 2 bar	2700	52,0	128.5 mm	95,5	1
K- 07 25 09 53	G 3/8	0.2 - 4 bar	2700	52,0	128.5 mm	95,5	1
K- 07 25 09 54	G 3/8	0.5 - 8 bar	2700	52,0	128.5 mm	95,5	1
K- 07 25 09 55	G 3/8	0.5 - 10 bar	2700	52,0	128.5 mm	95,5	1
K- 07 25 09 56	G 3/8	0.1 - 1 bar	4300	63,0	149.5 mm	110,0	2
K- 07 25 09 57	G 3/8	0.1 - 2 bar	4300	63,0	149.5 mm	110,0	2
K- 07 25 09 58	G 3/8	0.2 - 4 bar	4300	63,0	149.5 mm	110,0	2
K- 07 25 09 59	G 3/8	0.5 - 8 bar	4300	63,0	149.5 mm	110,0	2
K- 07 25 09 60	G 3/8	0.5 - 10 bar	4300	63,0	149.5 mm	110,0	2
K- 07 25 09 61	G 1/2	0.1 - 1 bar	5000	63,0	149.5 mm	110,0	2
K- 07 25 09 62	G 1/2	0.1 - 2 bar	5000	63,0	149.5 mm	110,0	2
K- 07 25 09 63	G 1/2	0.2 - 4 bar	5000	63,0	149.5 mm	110,0	2
K- 07 25 09 64	G 1/2	0.5 - 8 bar	5000	63,0	149.5 mm	110,0	2
K- 07 25 09 65	G 1/2	0.5 - 10 bar	5000	63,0	149.5 mm	110,0	2

Accessories

K-STECKSCHLOSS	Key lock

Spare parts

K-HALTERBAUSATZ HANSA	Holder HANSA
K-SCHALTTAFELMUTTER HANSA	Nut HANSA
K-DICHTSATZ HANSA	Set of seals HANSA

Despite careful checking, we cannot guarantee the accuracy of all information included on this site, and we accept no liability.