K-VERTEILER HANSA
Manifolds

HANSA FLEX

Properties

Input pressure	0 - 16 bar
Temp. range	-10 °C to +50 °C
Media	Compressed air
Connection thread	Material: Die-cast zinc
Housing	Material: Grivory® (PA 66)



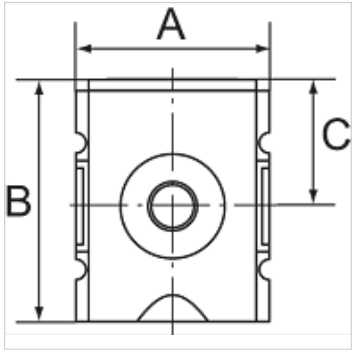

Note

Further information on request

Item

Identification	Outlets	Thread	Flow rate (L/min)	A (mm)	B	C (mm)
K- 07 25 11 17	3 x G 1/4	G 1/4	2700	52,0	65.5 mm	34,5
K- 07 25 11 18	3 x G 1/4	G 3/8	3600	52,0	65.5 mm	34,5
K- 07 25 11 19	2 x G 3/8, 1 x G 1/4, 1 x G 1/2	G 3/8	7250	63,0	80.5 mm	43,0
K- 07 25 11 20	2 x G 3/8, 1 x G 1/4, 1 x G 1/2	G 1/2	7250	63,0	80.5 mm	43,0
K- 07 25 11 21	2 x G 3/4	G 3/4	18000	85,0	109.5 mm	58,5
K- 07 25 11 22	2 x G 3/4	G 1	18000	85,0	109.5 mm	58,5

Spare parts

K-HALTERBAUSATZ HANSA	Holder HANSA
K-ERSATZBEHAELTER HANSA POLY	Spare tank HANSA polycarbonat
K-GERAETESTECKER	Coupling socket

Despite careful checking, we cannot guarantee the accuracy of all information included on this site, and we accept no liability.