K-WTEH KOMBI PC-BEHAELTER S H ABLV

Combination service units with polycarbonate bowl, bowl guard and manual drain valve

HANSA FLEX

Properties

Input pressure	Max. 16 bar (polycarbonate bowl), Max. 25 bar (metal bowl)
Media temperature	max. 50 °C
Ambient temperature	Max. 50 °C
Pore size in filter element	50 µm
Sealant	NBR
Housing	Die-cast zinc, Spring bonnet; PA
Dropper	PA
Flow rate measurement	At P1 = 8 bar, P2 = 6 bar and pressure drop Δp = 1 bar



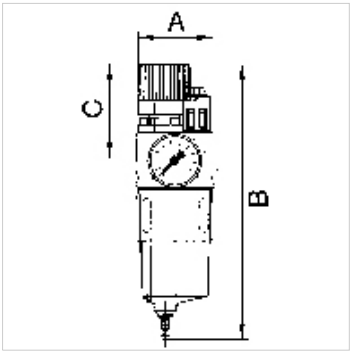

Note

Further information on request

Description

A filter, pressure regulator and oil-mist lubricator combined in a single device with an extremely compact design. The pressure setting can be locked by pushing the knob down. Oil can be filled under pressure.

Item

Identification	Thread	Control range	Flow rate (L/min)	A (mm)	B	C (mm)
K- 07 25 08 45	G 1/4	0.5 - 10 bar	1400	67,0	217.0 mm	68,5
K- 07 25 08 47	G 1/4	0.5 - 16 bar	1000	67,0	217.0 mm	68,5
K- 07 25 08 49	G 3/8	0.5 - 10 bar	1400	67,0	217.0 mm	68,5
K- 07 25 08 51	G 3/8	0.5 - 16 bar	1000	67,0	217.0 mm	68,5
K- 07 25 08 53	G 1/2	0.5 - 10 bar	1400	65,0	217.0 mm	68,5
K- 07 25 08 55	G 1/2	0.5 - 16 bar	1000	65,0	217.0 mm	68,5
K- 07 25 08 57	G 3/4	0.5 - 10 bar	3400	97,0	296.5 mm	96,5
K- 07 25 08 59	G 3/4	0.5 - 16 bar	2800	97,0	296.5 mm	96,5
K- 07 25 08 61	G 1	0.5 - 10 bar	3400	93,0	296.5 mm	96,5
K- 07 25 08 63	G 1	0.5 - 16 bar	2800	93,0	296.5 mm	96,5

Spare parts

K-HALTERBAUSATZ SERIE 81	Holder for series 81
K-ERSATZBEHAEL KOMBI	Spare tank
K-SCHUTZKORB G	Protective cage
K-VERSCHLEI-SATZ	Set of wearing parts
K-TROPFAUFSATZ POLYCARBO	Drip attachment polycarbonate
K-TROPFAUFSATZ METALL	Drip attachment metal
K-FILTERELEMENT	Filter element
K-ABLASSVENTIL AUTO	Fully-automatic drain valve with Adapter G 1/8
K-RD NIPPEL KURZ 1	Reducing nipples, short type
K-XV AGM 2	Double nipples, parallel male thread

Despite careful checking, we cannot guarantee the accuracy of all information included on this site, and we accept no liability.