# K-FI SPEZI PC-BEHAELTER H STANDAD

Special filters with polycarbonate bowl, with semi-automatic drain valve to G 1/2 and manual drain valve from G 3/4

## Properties

| | |
|---|---|
| **Input pressure** | Max. 16 bar (polycarbonate bowl / bowl guard), Max. 25 bar (metal bowl) |
| **Media temperature** | max. 50 °C |
| **Ambient temperature** | Max. 50 °C |
| **Efficiency** | 99.999 % |
| **Pore size in filter element** | 0.01 µm |
| **Housing** | Die-cast zinc, painted silver |
| **Flow rate measurement** | At P2 = 6 bar and pressure drop Δp = 1 bar |



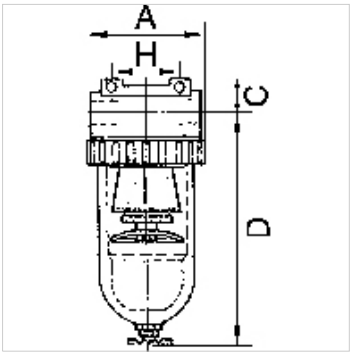


## Note

Further information on request

## Description

For all applications with particularly strict compressed air purity requirements. The separating efficiency of these filters permits very fine oil vapour particles and micro-fine suspended particles to be filtered. A standard filter should always be connected upstream to trap coarse impurities and protect the micro-filter inserts.

## Item

| Identification | Thread | Flow rate (L/min) | A (mm) | C (mm) | D (mm) | H (mm) | DN |
|---|---|---|---|---|---|---|---|
| **K- 07 25 10 76** | G 3/8 | 380 | 48,0 | 14,0 | 131,6 | 38,0 | 6 |
| **K- 07 25 10 83** | G 3/4 | 7000 | 133,0 | 36,0 | 206,0 | 134,0 | 20 |
| **K- 07 25 10 86** | G 1 | 7000 | 133,0 | 36,0 | 206,0 | 120,0 | 25 |

## Spare parts

| | |
|---|---|
| **K-HALTERBAUSATZ STANDARD** | Holder |
| **K-FILTERELEMENT STANDARD** | Filter element |
| **K-SCHUTZKORB G** | Protective cage |
| **K-XV AGM MS NI** | Double nipples, parallel male thread, nickel-plated brass |
| **K-LOESBARE DOPPELNIPPEL MS** | Double nipples |

*Despite careful checking, we cannot guarantee the accuracy of all information included on this site, and we accept no liability.*